INSTRUCTIONS
FOR
“POINT-TO-POINT
STEEPLE CHASES”

2026/27

Including
Guide to Procedures and Penalties
For Stewards

**(To be read in conjunction with
BHA Regulations for Point-to-Point Steeple Chases)**

The British Horseracing Authority Instructions for "Point-to-Point Steeple Chases"

In force for the current season

These Instructions are issued by the British Horseracing Authority and, in accordance with Regulation 171 of the Regulations for Point-to-Point Steeple Chases, must be followed and, where applicable, adhered to by all Point-to-Point Organising Committees in the organising and holding of all point-to-point Meetings.

Printed Copy

Also included at the end of the printed copy of the Instructions is the 'Guide to Procedures and Penalties' for the use of all Stewards acting at a point-to-point. The Guide does not constitute an Instruction (as detailed above) and has been included with the Instructions solely for ease of access, reference and circulation.

Any additions and alterations since previous Season have been written in bold

INDEX OF INSTRUCTIONS

1. Fixtures

Application 7
Abandoned and Postponed Meetings 7
Totalisator Facilities 7
Betting at Point-to-Point Meetings – The Gambling Act 8
Cancellation of Meeting/Removal of Approval 8

2. Programmes

Area Race Conditions and First Race Times 9
Racecards 9

3. The Course, Parade Ring and Winner's Enclosure

Number of Fixtures on a Point-to-Point Course 11
Point-to-Points on Licensed Racecourse 11
Pre-Inspection of Courses 11
Construction of Fence 12
Portable Fences 15
Layout of Courses 15
Numbers Board 17
Construction of Parade Rings 17
Procedure for Mounting in Parade Ring 17
Schooling over Fences 17
Winners/Unsaddling Enclosure 18
Course Watering/Hard Ground 18
Course Reinstatement and Maintenance 18
Finishing Post 19

Appendices

Appendix (3)A Fence Construction Guide 20
Appendix (3)B Local Inspector – Training And Accreditation 22
Appendix (3)C Local Inspector – Pre-Raceday And Raceday Checklist 24

4. Entries

Entry Forms/Scrutiny of Entries 26
Hunter Certificates 26
Division of Races at Entry 26
Division of Races at Declaration & Balloting Procedures 27
Division of Races on the Day – Riders' Preferences 27

5. The Meeting

General Remarks 28
Admission Charges for Bookmakers 28
Withdrawal of Declared Runners 29
Weighing In 29
Broadcast Running Commentaries 29
Announcements/Communication 29
Commercial Video Operators 30
Head Cameras (Jockey Cam) 30
Use of Video Recordings by Stewards 30
Form/Betting Information 30
Riders Reporting to a Doctor (RMO) After a Fall 31
Raceday Rider Testing 31
Inspection Protocol and Postponement/Abandonment of Meeting 32

6. Health and Safety
Introduction 33
The Public 33
The Course 33
Loading and Unloading of Horses 34
Medical Resources 34
Organisers' Vehicles 34
Loose Horses 34
Serious Incident/Fatality Management 34

Appendices
Appendix (6)A POINT-TO-POINT INCIDENT MANAGEMENT 36

7. Horses and Riders
Passports 37
Tying down of Horses' Tongues 38
Tubed Horses 38
Advertising 38
Qualification of Riders 39
Skull Caps 40
Body Protectors 41
Use of Spectacles and Contact Lenses 41
Whips 41
Spurs 42
Blinkers/Headgear/Red Hoods 42

8. Officials: Clerk of the Course; Clerk of the Scales; Declarations Clerk; Valet; Starter; Judge; Fence Attendants; Stewards
Clerk of the Course 43
Clerk of the Scale 46
Declarations Clerk 47
Valet 49
Starter 49
Fence Attendants 52
Judge 53
Stewards 55

Appendices
Appendix (8)A RIDERS' QUALIFICATION CERTIFICATE (RQC) DECLARATION 57
Appendix (8)B DECLARATION TO RUN 58
Appendix (8)C DECLARATIONS SHEET 59
Appendix (8)D DOUBLE (OR MORE) DECLARATION OF RIDERS TABLE 60
Appendix (8)E FENCE ATTENDANTS – DUTIES AND AUTHORITY 61
Appendix (8)F DIRECTION MARKERS AND FLAGS FOR BY-PASSING 63
Appendix (8)G BY-PASSING PROCEDURES 64
Appendix (8)H JUDGING PROCEDURES 65
Appendix (8)I DISTANCES 66
Appendix (8)J JUDGE'S RESULT CARD 67
Appendix (8)K CLERK OF THE COURSE BRIEFING CHECKLIST 68

9. Veterinary Arrangements
Duties of the Organising Committee 71
Provision of Services 71
Destruction of Horses 73
Disposal 74

Appendices
Appendix (9)A SENIOR POINT-TO-POINT VETERINARY SURGEON (SPVS) RESPONSIBILITIES 75

10. Medical Arrangements
Duties of the Point-to-Point Organising Committee 78
Appointment of Senior Racecourse Medical Officer 78
Role of the Senior Racecourse Medical Officer 78

Medical Record Book (MRB) 79
Raceday Confirmation that Medical Arrangements meet Requirements 80
BHA Point of Contact 80

Appendices
Appendix (10)A MEDICAL ARRANGEMENTS 81
Appendix (10)B CONCUSSION PROTOCOLS 112

11. Conclusion of the Meeting
Return of Marked Racecard and Other Documentation 113
Medical Report Forms and Rider Injury Notification 113

Appendices
Appendix (11)A MARKED RACECARD 114

GUIDE TO PROCEDURES AND PENALTIES

Stewarding at a Point-to-Point Meeting
Deployment of Stewards 117
Stewards' Powers 118
When to hold an enquiry 119
Conduct of a Stewards' Enquiry 119

Running and Riding
When to hold an enquiry 122
Having decided to hold an enquiry 122
Has a breach of the Regulations been committed 122
When in breach 123
When not in breach 123
Improvement in performance 123

Interference
Holding an Enquiry 124
Categories and Definitions 124
Determining the result following interference 126
Guiding Principles 127
Interference Options 128

Use of the Whip
Unacceptable uses of the whip 129
Procedures 130
Restrictions 130
Penalties 130
Subsequent whip breaches 131
Owner's/Keeper's liability 131
Hands and Heels Races 132

Hazards at Fences
Advice and Guidance 133

Common Offences and Penalties
Stewards' Powers 134
Owners/Keepers 134
Recommended penalties for common offences 134
Running and Riding penalties 138
Breaches of the Regulations for which horses
must be disqualified by the Stewards 139
Objections to decision of Judge 139
Penalty guide to 'rider testing' breaches following referral to BHA 140

Appendices

Appendix (St)A COMMON STEWARDS' ENQUIRY ANNOUNCEMENTS AND NOTICES 142
Appendix (St)B AIDE-MEMOIRE – RUNNING AND RIDING 144
Appendix (St)C AIDE-MEMOIRE – INTERFERENCE 146
Appendix (St)D AIDE-MEMOIRE – USE OF THE WHIP 148

1. FIXTURES (Regulation 62)

APPLICATION

1.1 An Application Form will ordinarily be mailed to all Point-to-Point Secretaries. This Application Form must be completed and returned to the Point-to-Point Authority (PPA) by the agreed date together with the Fixture Fee if a date for a Point-to-Point Meeting is to be considered by the British Horseracing Authority (BHA).

A complete list of all Point-to-Point Fixtures for the coming Season will be made available on the National Point-to-Point website and published in the Racing Calendar following agreement and subsequent to the respective PPA and BHA Board Meetings in September.

Secretaries are particularly asked to ensure that the choice of date given on the Application Form is the one that has been agreed locally at the Area Meeting of Point-to-Point Secretaries and submitted for approval at national level by the Point-to-Point Secretaries Association (PPSA).

Unless permission has been obtained from the PPA, amalgamated Hunts will only be allowed to apply for and be granted one fixture in any Point-to-Point Season.

ABANDONED AND POSTPONED MEETINGS

1.2 Please note that if a Meeting is

(a) Abandoned – the full fixture fee still remains payable;

(b) Postponed and rearranged – no additional fixture fee is payable;

(c) In the event of a re-arranged Meeting, it is the Secretary's responsibility to liaise with the PPSA Area representative and agree an alternative date. Where applicable the Area representative should also liaise with their counterpart(s) in neighbouring Area(s). It is then the Area representative's responsibility to confirm details with the PPA who will inform the BHA.

(d) Where there are one or more objections, the Area Secretary will liaise with the PPSA Chair (or in their absence the Vice-Chair) who will select two additional Committee members to adjudicate the objection. Such additional Committee members to be, as far as possible, geographically neutral to the protagonists. The MAJORITY decision of this group will be FINAL.

TOTALISATOR FACILITIES

1.3 Meetings must apply to run their own Tote.

Organising Committees will need to obtain written authorisation from a licensed non-remote pool-betting operator.

The Gambling Commission has a public register of licensed operators at: https://secure.gamblingcommission.gov.uk/PublicRegister/Search.

BETTING AT POINT-TO-POINT MEETINGS – THE GAMBLING ACT

1.4 In respect of the Gambling Act 2005, Section 39, Organising Committees are required to apply to their Local Council Authority for an 'Occasional Use Notice'. There is no formal application form or procedure so a letter will be appropriate. There is no need to apply for a 'Premises Licence' as this is only required when there are eight or more fixtures per calendar year at the venue. Organising Committees must also inform their local Chief of Police of their application for an 'Occasional Use Notice'.

CANCELLATION OF MEETING/REMOVAL OF APPROVAL (REGULATION 1(i))

1.5 When a British Hound Sports Association (BHSA) hunt is suspended they may not hold a Point-to-Point fixture, or be a party to a Point-to-Point fixture, during the suspension period or for a period of one full calendar month after the suspension has expired, irrespective of whether the suspension is full or partial and covers all or some hunt activities. A hunt may not hold a Point-to-Point fixture, or be a party to a Point-to-Point fixture, if any senior officer of the hunt is suspended; in particular Masters, Chairpersons, huntsman or associated professionals, during their suspension period or for a period of one full calendar month after the suspension has expired. A suspended hunt can apply for a re-scheduled fixture date only once the suspension period has expired, this will be subject to a suitable date being available within the fixture list and must be requested through the area secretary and the PPSA.

The BHA or the PPA, through their delegated powers from the BHA, may withdraw approval for any Point-to-Point fixture with immediate effect for any number of reasons including, but not limited to; if it believes the running of the fixture will bring the BHA, PPA, Point-to-Pointing or wider horse racing into disrepute, cause reputational damage to any party, damage the image of Point-to-Pointing or wider associated horse racing, have a negative impact on public perception of the sport or its social license.

Where the decision to withdraw approval is to be taken by the PPA it will require a majority vote by available PPA board members, with a minimum quorate of four, made up of three board members and a chair, three board members and the Chief Executive Officer, or two board members plus the Chair and Chief Executive Officer.

2. PROGRAMMES (Regulations 70-72)

AREA RACE CONDITIONS AND FIRST RACE TIMES

2.1 Point to Point Fixture Secretaries, or their agreed substitute, must submit a draft copy of their intended programme of races to their Area Secretary. Once any amendments have been agreed between the Area Secretary and Fixture Secretary, the Area Secretary will submit the final draft programme of races to the PPA. Further amendments may occur after discussion between the PPA, Area Secretary and Fixture Secretary until agreement is reached, at which point the PPA will submit the finalised fixtures race programme to the Point-to-Point Racing Company (PPRC) for inclusion in the planner.

First Race Times

The advertised time for the running of the first race should be arranged so as to allow for further races to be run at the end of the programme should any safety factors be exceeded, and races be divided. It is not acceptable for the Stewards to instruct a ballot on the day (see 'Entries' section 4.4) because the Meeting had started with not enough time being allowed for the potential division of races.

RACECARDS

2.2 The conditions of individual races, which are advertised in the National Point-to-Point & Hunter Chase Race Planner for the benefit of owners to make their entries, must be accurately transcribed into the Racecard. In addition the Racecard is to contain the following:

i) notices required by Regulation 70

ii) safety factors

iii) name of the owners (or if applicable the group ownership name including the name of one of the owners) and the horse

iv) the colours to be carried by the rider

v) the age, sex, colour, breeding and where possible the form of the horse

vi) the weight to be carried

vii) with the exception of Hunt Races, the name of the Hunt from which the horse's certificate was obtained

viii) acknowledgement to the Levy Board for the grant provided

ix) the keeper

x) details of the horse and or rider sponsor (as applicable – see Appendix L of the Regulations)

xi) the 'What3Words' location of the emergency helicopter landing point.

A copy of the Area's race conditions for the Season must be available on the day of the Meeting for the benefit of all Officials concerned so that in case of a discrepancy between the Racecard and Area's race conditions, the conditions as stated in the National Point-to-Point & Hunter Chase Race Planner are adhered to as all entries made by owners have been based on these conditions.

The point-to-point conditions contained within the National Point-to-Point & Hunter Chase Race Planner will be, for point-to-point purposes, the definitive conditions unless the BHA has authorised a change to the conditions; in which case the revised conditions shall apply.

3. THE COURSE, PARADE RING AND WINNER'S ENCLOSURE

NUMBER OF FIXTURES ON A POINT-TO-POINT COURSE

3.1 The number of Point-to-Point Meetings that are to be held over any one course is conditional upon a report from the BHA Inspector of Courses who takes into account the interval between Meetings, the nature of the ground, the personnel and equipment available, and the ability of the fences to withstand more than one day's racing.

POINT-TO-POINTS ON LICENSED RACECOURSES

3.2 Applications to hold Point-to-Point Meetings on licensed racecourses will be subject to the following conditions:

(a) All Point-to-Point fences should be separate from those fences used for races under the Rules of Racing.

(b) No cars should be parked on any part of an existing turf Flat or Steeple Chase track.

(c) Provided that the racecourse is agreeable and by doing so it did not damage the existing track there should be no restriction on the use of the parade ring, saddling boxes and security area.

Note: The BHA General Instruction on the use of racecourse stables between Meetings must, however, still be observed.

(d) If any running rails are moved all exposed spigots must be removed or totally covered.

PRE-INSPECTION OF COURSES

3.3 Every course will have appointed to it:

- a BHA Inspector of Courses (BHA Inspector) with overall responsibility for any decision relating to racing on the course; and
- a part-time BHA Local Inspector (Local Inspector) with responsibility for day-to-day discussions with the course and for carrying out pre-raceday and raceday inspections. (see Appendix (3)B 'Selection, Training and Assessment of Local Inspector' and Appendix (3)C 'Local Inspector – Pre-Raceday and Raceday Checklist').

The name and address of the respective Local Inspector and BHA Inspector allocated to each course will be supplied to the Fixture Secretary after the Fixture List has been arranged.

Every point-to-point course will be inspected once every three years by a BHA Inspector or as and when necessary if requested by either the Local Inspector or Clerk of the Course. The Local Inspector will, as a minimum, carry out a pre-raceday and raceday inspection for every meeting.

The Clerk of the Course at a Point-to-Point Meeting will be required to produce all fences in reasonable time before the day of the Meeting. The Local Inspector must be invited to make an inspection of the course at that

time so that there will be ample opportunity for any action to be taken and alterations made where necessary. Depending on the condition of the course on their first visit, an additional visit may be necessary. If an additional inspection is necessary it will occur before the Meeting takes place.

At the conclusion of the meeting the Local Inspector will send a report, covering both their pre-raceday and raceday inspections, to the BHA. Local Inspectors are advised to discuss the content of their report with the Clerk of the Course on the day and a copy of the report will subsequently be provided to the Clerk of the Course, the Fixture Secretary and the Area Secretary.

Organising Committees are advised to take advice on the building of their fences from a professional fence-builder who is employed by a racecourse holding steeple chase fixtures under Rules. All fences on any one course should, as far as possible, be uniform and consistent; in particular on those courses where both portable and permanent fences are used.

A Local Inspector cannot act as a Steward at a Point-to-Point Meeting where they are its Inspector. In addition, where a Local Inspector is offered another Raceday Officials duties on a course where he is the Inspector, he must consider the potential conflict of interests and seek clarification from the BHA. Similarly, Local Inspectors should not be a member of a Hunt Committee staging a fixture on the course that they inspect.

If there is concern regarding the condition of the course in advance of entry stage that may lead to abandonment or postponement of the Meeting, the BHA Inspector should be consulted and can attend prior to a final decision being reached.

When a Meeting is abandoned or postponed, the Local Inspector must be informed immediately. Failure to do this may cause an unnecessary journey being made and the Organising Committee will be responsible for paying the Local Inspector's travelling expenses. A fee for attendance plus car mileage will be paid.

CONSTRUCTION OF FENCES (Regulation 80 and Appendix (3) A (to this Instruction))

3.4 Detailed recommendations on the construction of permanent fences are set out below. Local Inspectors have been asked to ensure that these recommendations have been carried out to their satisfaction before any Point- to-Point Meeting is held.

Should there be plans to modify any fences away from the traditional structure, the BHA Inspector must be consulted in good time ahead of the Meeting.

If there are any particular points which need clarification, the BHA Inspector should be contacted for their assistance. BHA Inspectors visit all National Hunt courses regularly during the Season and if given adequate warning may be able to meet Clerks of Courses or Local Inspectors to discuss points of detail.

BHA Inspectors should always be informed when a course intends to use a new fence builder.

The BHA acknowledge that measurements when constructing fences can never be absolute, and that small variations may be found, but courses should endeavour to meet the guidelines stated. See Appendix (3)A for fence construction diagrams.

(a) **Height of Fence**

Fences shall not be less than (1,295mm.) 4ft 3ins. in height, measured from take-off side to the highest point (A-B) except in the case of a water jump or where the nature of the ground justifies any variation.

(b) **Plain Fences**

A plain fence should be built on a base of about (1,676mm.) 5ft 6ins. (C-D) and the slope of the fence should reduce the thickness at the top to about (305mm.) 12ins. (E-F) which should be of fine birch. The base measurement is calculated as the distance from the take-off board, or apron to the point on the landing side vertically below the overhang of the birch.

(c) **Open Ditches**

The width of the fence at the top should be about (610mm.) 2ft (L-M) and the width of the ditch (1,524mm) 5ft, measured from the front edge of the frame on the take-off side to the front of the guard rail (O-P). The frame rail of the fence on the approach side must be obscured so that horses approaching the ditch do not see two parallel rails (the guard rail and the frame rail) and the material used should not overhang the ditch by more than (457mm) 18ins.

Where portable open ditches are used, the turf should either be dug out or covered with sand or earth.

(d) **Frames / Advertising Hoardings**

No frames should be higher than (559mm) 24ins. From ground level (J-K). Advertising hoardings (either canvas or rigid) must not be attached to fences unless they are securely fixed and below frame height. There must also not be string attached or tied to the birch above the height of the frame.

(e) **Guard Rails**

(i) Open Ditch – It is recommended that the rail is between (304mm) 12ins and (457mm) 18ins high and must be painted white. The boards beneath the rail (in cases where a turf facing is not used) must be painted white. To prevent shine a gloss finish must not be used.

(ii) Plain Fence – Where guard rails are used, they MUST be painted white. A gloss finish must not be used. Dimensions of (102mm) 4ins by (51mm) 2ins are recommended. The top of the guard rail should not be higher than (635mm) 25ins. (i.e. half the height of the fence) from ground level, and must be recessed into the line of the fence (G-H).

The Padding of Guard Rails, where used, is compulsory. Fence builders should cover all guard rails with tight fitting and well secured foam padding (also painted white). For the avoidance of doubt, the take-off boards on open ditches must also be padded.

N.B. Guard rails are not compulsory. However, should a Meeting wish to omit guard rails in their fences (ordinarily when using spruce) they must first seek approval from their BHA Inspector.

(f) **Take-Off Boards**

These are compulsory and must be painted white. (254mm) 10ins. by (51mm) 2ins. is the recommended minimum size of which (51mm) 2ins. should be either let into the ground or turves placed between the ground and the board. There must be no gaps between the ground level and the bottom of the take-off board. In addition, to ensure clear visibility of the take-off board it may be necessary to strim along the front of the board.

(g) **Aprons**

It is recommended that birch, broom or spruce is used. Gorse is not acceptable. In order to maintain uniformity all plain aprons must consist of the same material. Open ditch aprons may consist of other suitable material as agreed with the BHA Inspector.

(h) **Wings**

Wings must be provided and except in the circumstances detailed below must be made of plastic. The design and type of wing support must be approved by the Local Inspector. The supports should be constructed from rounded timber and be no more than (76mm) 3ins in diameter with the support behind the leading edge of the wing being preferably padded. Under certain circumstances (e.g. high winds) a support in the form of a T-bar can be used mid-way along the wing. This can be constructed from rounded timber or plastic and must be no more than (1,219mm)4ft in height and (76mm) 3ins in diameter.

The recommended height of the wings where they join the fence is about (1,829) 6ft. and the length not less than (5,486) 18ft.

When a fence is built in the line of an existing bank or wall, wings need not be provided, but the bank or wall for a distance of (4,572) 15ft. on either side of the fence, must be, or made up to be, not less than (1,829) 6ft. in height. (See ‘Gaps Beside Fences’ below).

Wings should be sited where possible such that they are no more than 3ft out from the perpendicular.

(i) **Width of Fences**

Unless otherwise agreed with the BHA Inspector the overall width of the first fence for any race should not be less than 14 yards in width (inclusive of bosses) and every other fence not less than 10 yards in width (inclusive of bosses).

(j) **Gaps Beside Fences**

Every fence must have a gap adjacent to it on one side through which the field may race in the event of the fence being deemed unsafe to jump. The gap should be no less than 5 yards wide with no barbed or naked wire left within 15 yards of the gap, nor shall any vehicle be parked within that distance of the fence or gap.

The gap and angle of adjacent wing must be positioned to give the least deviation from the line of running and should also be roped off. THE RACING SURFACE THROUGH THE GAP MUST BE COMPARABLE TO THAT OF THE MAIN PART OF THE COURSE.

It is recommended that such gaps should be on the outside of the obstacle.

(k) **Area Around Fences**

Where fences are built in an existing fence or hedge line, there shall be no barbed or naked wire left within 15 yards of the fence on either side, nor shall any vehicle be parked within that distance of any fence.

Where fences are sited within close proximity of the car parks (i.e. home straights etc.), the Clerk of the Course must ensure that there is a sufficient lay-by area between the wing of the fence and the perimeter of the car park area. (See 'Gaps Beside Fences' above).

It is strongly recommended that all public areas immediately before and after a fence are double railed/roped on the inner to prevent the crowd from standing (or cars parking) too close to the racing line.

PORTABLE FENCES (SECTIONAL FENCES)

3.5 On those courses where portable fences are used, the design must be approved by the BHA Inspector. Should a Meeting consider the introduction of portable fences on their course, the Clerk of the Course must first of all obtain the necessary approval from the BHA Inspector.

Care must be taken to ensure that the portable fences are consistent with those permanent fences already sited on the course. Instructions on the construction of portable fences are available from the manufacturers and should be strictly adhered to. It is important to ensure that the adjoining sections are bolted together at the base, and then secured either by means of metal/steel hoops or wooden stakes on the landing side (not above timber it is supporting) to avoid any movement.

When fences are refurbished, it is essential that they are made up to the required standard.

LAYOUT OF COURSES

3.6 (a) **Overall Layout Considerations**

Some time should be taken to consider the following key points (not exhaustive) when considering changes to a site for a Point-to-Point:

(i) Access and Egress

- Roads and gates available for normal movement to and from the course to avoid queues on public highways.
- Routes and waiting area for emergency vehicles including Air Ambulance

(ii) Horse Box Park. Close to road. Shady with through draught if likely to be hot. Access to water. Preferably away from public but easy to reach from Parade Ring and course (but preferably not visible before winning post).

(iii) General Public. Car park in line with expected numbers, and plans in place for overflow. Movement through the day should not naturally bring them close to Officials' area or horse box park

(iv) Serious Incident/Emergency. Layout of site, including routes in and out, allow Officials and external emergency vehicles to handle any incident without serious adjustment required. Awareness by all senior personnel of 'what3word' location.

(b) **Course Modification**

Plans to alter the course away from the known circuit, require consultation with the Local Inspector in good time ahead of the Meeting and if necessary further consultation should take place with the BHA Inspector.

(c) **Position of Start**

There should not be an excessive run up to the first fence. A distance, where practicable, of between 100 yards and 120 yards is recommended.

(d) **Marking of Course**

Where it is necessary to fence any part of the course to prevent the public from encroaching on to the track during the course of a race the uprights used to support the ropes or tapes should be of wood, rounded to minimise the chance of injury to horse or rider. Organising Committees must consult their BHA Inspector if they wish to use any material other than the above. The use of metal stakes is not satisfactory. It is strongly recommended that as much of the home straight as possible is railed to provide a well-defined line for tired (and possibly drifting) horses towards the end of the race.

Public car parking should be organised in such a way that it is not possible to park immediately adjacent to running rail or ropes/tapes which define the racing line. (See also 'Health and Safety' section 6.3).

(e) **Bends**

Bends should be clearly marked with flags or boards which may be supported by black and white hurdles, plastic rail or round bales. The use of a single round bale to denote a bend is to be avoided. In each case the supports must be secure with the markers positioned so that they do not interfere with oncoming horses/riders.

The use of roped bends to mark the inside of the racing line is not permitted. Where rope is essential, course markers must be used to keep runners off roped bends. Clerks of Courses are advised to consult their BHA Inspector should they wish to source plastic running rail.

Bends and course markers should always be supported by a bundle/faggot of birch or padding (e.g. foam) attached to their outside.

(f) Extra Course Markers

Organisers are advised to retain a number of spare course markers in the event that bad weather necessitates 'dolling out' certain false or waterlogged patches of the track.

(g) Marking of Course Site

Critchley and Severn plastic are not acceptable materials for use anywhere on the Point-to-Point Course.

Note: Not all of the requirements highlighted in sub-sections 3.4, 3.5 and 3.6 need to be complied with in the case of Hunt Members races being run over natural country.

NUMBERS BOARD

3.7 A numbers board must be provided and suitably positioned to be clearly visible to the public and be of an appropriate size to advertise the maximum number of runners and riders, colour changes, overweights, blinkers, tongue straps and the going.

CONSTRUCTION OF PARADE RINGS

3.8 **The parade ring must be large enough to accommodate the number of horses equivalent to the maximum safety factor, allowing not less than 16ft per horse,**

The parade ring must be double railed with a minimum gap of 1 metre and child/dog resistant fencing on the outside rail - properly fixed orange/blue plastic mesh material can be used for this purpose. If metal crowd barriers are being used to define the outer rail, they must also be made child/dog resistant. Where a winners/unsaddling enclosure is incorporated into the parade ring, sufficient additional space must be provided over and above the 16ft per horse.

Besides Officials, only owners, keepers. riders and stable staff with horses participating in the race should be allowed access to the parade ring. A sign confirming that children under the age of 12 (or older if stipulated by Health & Safety requirements and/or the Organising Committees) are prohibited from entering the parade ring must be installed.

PROCEDURE FOR MOUNTING IN PARADE RING

3.9 The following procedure is recommended.

When the signal to mount is given, the horses:

(a) shall be made to stand still with their heads towards the centre of the Parade Ring and riders will walk immediately to where their horses are standing and will mount there, or

(b) will continue to proceed around the Parade Ring and will be mounted at the walk.

Horses should not be lead or ridden across the middle of the Parade Ring. When the rider has mounted, the horse may be walked round the Parade Ring, in the same direction as the horses were walking before they were mounted, until it is time to go down to the start.

SCHOOLING OVER FENCES

3.10 The practice of allowing horses to be schooled on a course after the completion of a Meeting is only permitted (regardless of subsequent Meetings due to be held), with the permission of the land owner and at the discretion of the Organising Committee.

However, it is the Organising Committee's responsibility to ensure that adequate medical and veterinary cover is in place and that both the course and fences are put back properly in readiness for the next Meeting.

WINNERS/UNSADDLING ENCLOSURE

3.11 Individual (i.e. partitioned) stalls for the first four horses in each race are not recommended. An "open plan" area for these horses is a better alternative. Where provided, stalls must be made sufficiently wide for the horses' comfort and to minimise the risk of connections, photographers etc. being kicked or squeezed against the partitioning.

COURSE WATERING/HARD GROUND

3.12 Organising Committees are strongly encouraged to liaise with their Stewards and BHA Inspector if the going is likely to be Hard (i.e. the ground is impenetrable with a stick of not less than ½ inch diameter tip). If the ground is considered to be officially "Hard" the Meeting MUST be abandoned/postponed.

Before plans are made to water a course Organising Committees MUST ensure they have obtained a water extraction licence where it is necessary to do so.

To maximise the efficiency and consistency of any watering carried out Organising Committees should take account of the following "best practice" guidance:

- Every effort must be made to achieve an overall consistency of ground conditions of the racing surface/by-pass areas and to avoid any rutting thereon from vehicles during application of water.
- 'Spiking' the ground, if possible, will assist in the penetration of the water.
- If the water is to be dispensed from a bowser then it is best to dispense it sideways from the bowser.
- Organising Committees should take care that watering does not continue so close to the first race time that the conditions become very slippery. Advice should be taken when deciding whether to water on the raceday itself.

COURSE REINSTATEMENT AND MAINTENANCE

3.13 It is strongly recommended that the course is reinstated or 'put back' within 24hrs-48hrs of a Meeting – especially when the venue stages more than one fixture during the year. In these cases 'treading in' and the use of a Cambridge Roller (conditions permitting) are recommended. The BHA Inspector can provide general advice on sports turf equipment.

Organising Committees must contact their BHA Inspector prior to implementing any large-scale de-compaction work that they are intending to carry out. This includes the use of any 'earthquake' machine or 'shakeaerator'.

FINISHING POST

3.14 A board 2ft wide backing the far side finishing post. It must provide enough contrast for the Judge to be able to clearly identify the finishing line.

The board will prevent others filming the finish from the far side along the finishing line.

APPENDICES

APPENDIX (3)A	FENCE CONSTRUCTION GUIDE
APPENDIX (3)B	LOCAL INSPECTOR – TRAINING AND ACCREDITATION
APPENDIX (3)C	LOCAL INSPECTOR – PRE-RACEDAY AND RACEDAY CHECKLIST

Appendix (3)A

Fence Construction Guide

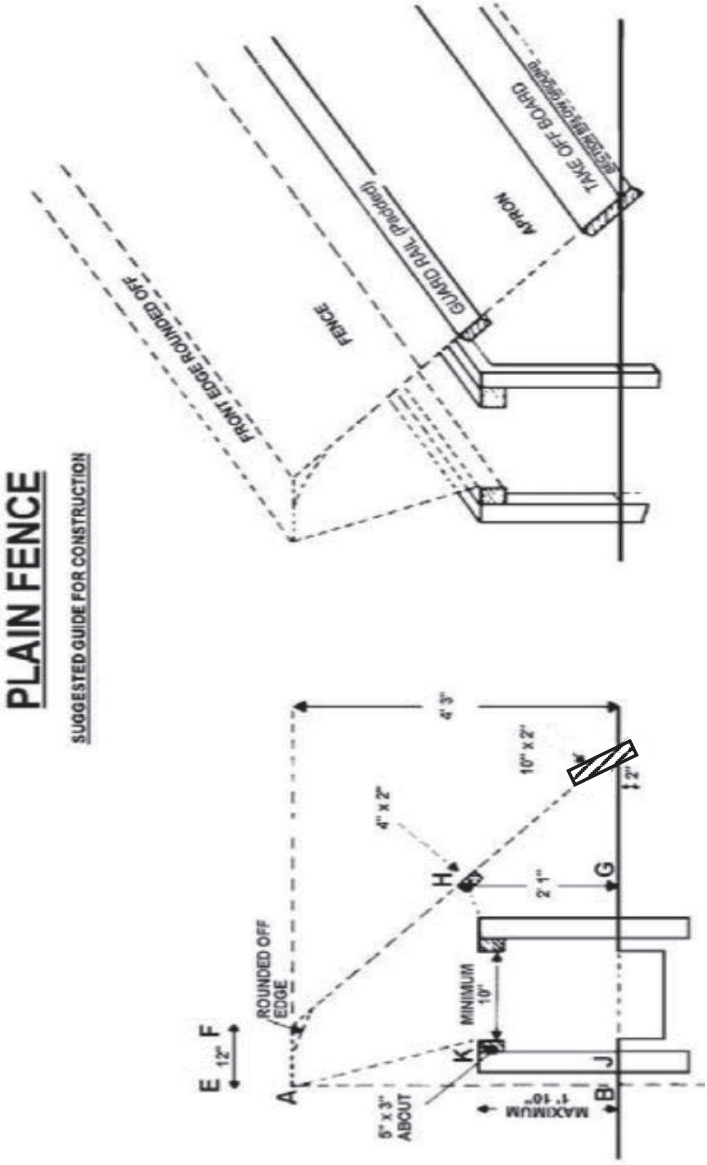

OPEN DITCH

SUGGESTED GUIDE FOR CONSTRUCTION

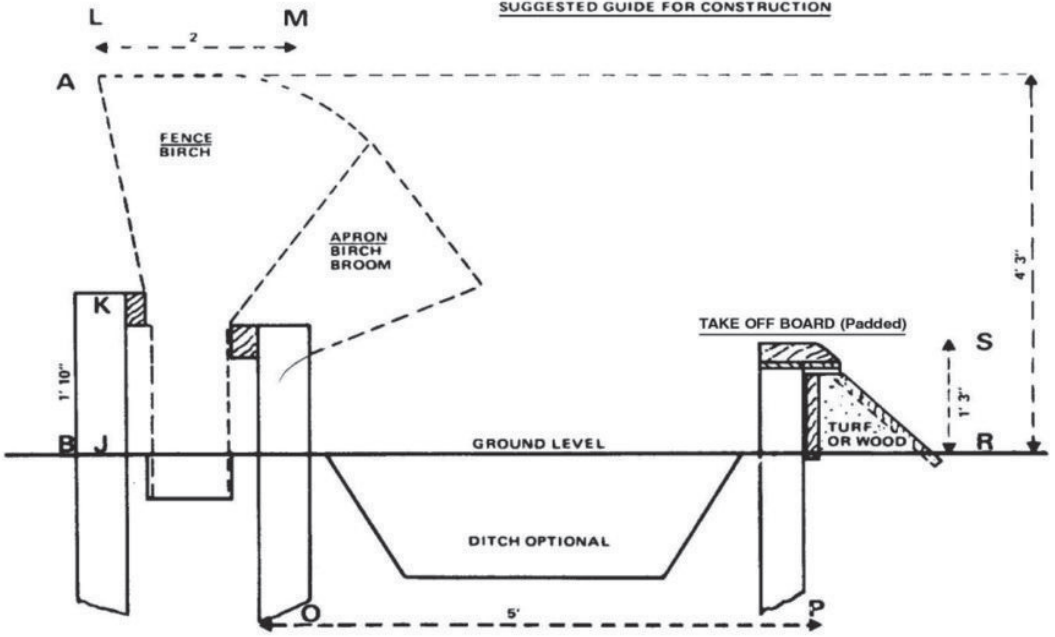

Appendix (3)B

Local Inspector – Training and Accreditation

THE ROLE

1. A Local Inspector is employed by the BHA and receives travel expenses and a 'daily rate' for carrying out a pre-raceday inspection and raceday inspection of each of their course before every Meeting.

2. At each inspection the Local Inspector must assess all aspects of the course for compliance with the Instructions – ground, fences, alignment, by-passes, signage, rails, etc.. Any failures or concerns should be pointed out and discussed with the Clerk of the Course, and a time frame given for them to be rectified.

3. On raceday, the Local Inspector should also take a wider view of the overall arrangements in place at a Meeting and check that flags and by-passing equipment are in place at fences and attend the Clerk of the Course briefing before racing. During racing any perceived problems with the veterinary or medical arrangements should also be discussed with the Clerk of the Course.

4. If any serious concerns are identified that may jeopardise the Meeting taken place the Local Inspector should immediately seek advice and assistance from the respective BHA Inspector

5. At the conclusion of every Meeting a report should be completed and sent back to the BHA. The report should include any points of concern and the time frame given for their correction.

SELECTION

6. Any person may be put forward to become a Local Inspector. The person should, preferably, have previous first-hand knowledge of Pointing and previous experience of working at a course.

7. If it proposed that the person is to act as a Local Inspector at a course with which they have previously had a direct involvement, the person and the BHA must be satisfied that they can set aside their previous involvement with the course and act in an independent capacity on behalf of the BHA.

TRAINING

8. In order to be accredited as a Local Inspector any new person should, whenever possible:

   - act for a Season accompanying the existing Local Inspector
   - accompany a Local Inspector, at a different course, to observe them carrying out their pre-raceday and raceday inspections
   - accompany the Clerk of the Course throughout a Meeting.
   - accompany the BHA inspector at a Meeting.

9. Completed, at least, two Local Inspector reports in respect of attendance at a Meeting either with the existing Local Inspector or the BHA Inspector.

   Note: Whilst training, expenses for mileage are paid but not the 'daily rate', which is only paid to accredited Local Inspectors.

ACCREDITATION

10. After any training day the respective Local Inspector, Clerk of the Course and BHA inspector will be required to submit a 'Performance Assessment'.

11. The Local Inspector reports submitted must be of an acceptable standard.

12. A final assessment day, overseen by the BHA Inspector or existing Local Inspector, will be carried out and must be passed to their satisfaction.

ONGOING TRAINING

13. Thereafter, a Local Inspector must attend one training course every two years put on jointly by the BHA and PPA.

Appendix (3)C

Local Inspector – Pre-raceday and Raceday Checklist

PRE-RACEDAY

1. **Track**

Going	Racing surface, Animal Scrapings, False ground, Crossings/Run throughs [Inst 3.12, 8.1]
Course layout	Starts, Finishing post, Bends, Markers, Vehicle parking areas [Inst 3.6]
Fences/Wings	Number, Condition, Dimensions, Take off/landings, Wings, Advertising hoardings, Bypassing (min 5yds) [Inst 3.4, App (3)A]
Equipment	Bypass arrows, Flags, Fox 40 Whistles, Extra Course markers [Inst 3.6, App (8)E, App (8)F]
Starters Rostrum	[Inst 8.5]
Judges Position	Position of and clear sight of winning line [Inst 3.14, 8.7]
Stewards Positions	Side on, Head on, View of track [Inst 8.8]

2. **Facilities**

Paddock/ Winners Enclosure	Size (16ft per horse), double railed, **with outside rail being child/dog proof.** Water provisions [Inst 3.8, 3.11]
Numbers Board	[Inst 3.7]
Horse Box Park	Water Provisions, Access [Inst 3.6, 6.4]
Weighing Area	Correct signage, Changing areas, Stewards enquiry area [Inst 8.1, 8.8, App (8)E]
Car Parking	Positions of…, Effect course/loose horses, Wider access [Inst 3.4, 3.6]
Gates	Manned/closed [Inst 3.6]

3. **Medical Arrangements** [Inst 10]

Riders Medical Area	[Inst 8.1]

Air Ambulance landing provision with 'what3word' position [Inst 3.6, 6.8]

4. **Veterinary Arrangements** [Inst 9]

Casualty Storage Area	Designated area, Secure, Private, Undercover (Barn/ Fence tarp) [Inst 8.1, 9.4]
Ambulance and Recovery	Front Unloading Ambulance, High-sided and Covered Recovery Vehicle [Inst 8.1, 9.2]
Water Provisions	Mobile water, Locations, Refillable, Buckets [Inst 8.1, 9.2]
Screens	Number of…, Positions of…, Viewing holes, [Inst 8.1, 9.2]

5. **Rapid Response Vehicle**

Provision of…, Position of… and by whom [Inst 6.8, 8.1 App (6)A]

Training	[App (6)A]
Raceday Communication	How and with whom [App (6)A]

6. **Stop Race Procedure/By passing/Hazard ahead**

Stop-Race Flags(min 3)*	Positions [Inst 8.1, App (8)K]
*** Stop-Race Reminder**	All stop race flags to be raised in event of stop race
Fence Attendants	Provision of…, Training, Raceday Communication. [Inst 8.6, App (8)E]
By-Pass Demonstration	Where and when to be done on raceday. [Inst 8.1, App (8)K]
Loose horse plan	Catching areas, access points/gates closed, etc. [Inst 6.7]

A PRE-RACEDAY CHECKLIST IS AVAILABLE ON THE GBPOINTING WEBSITE (www.gbpointing.com)

RACEDAY

1. **General**

Recheck all previous provisions and that everything that wasn't in place for the pre-raceday inspection has been provided as per earlier discussion.

Check that any work requested at the pre-raceday inspection has been carried out

2. **Provision of Services**

Medical Attendance

Veterinary Attendance (incl. Horse Ambulance and Recovery Vehicle)

Fence Attendants

3. **Pre-Race Briefing**

Attend briefing (see Appendix (8)K 'Clerk of the Course briefing Checklist')

4. **During and Post-Racing**

Liaise with Officials, SRMO and SPVS to identify any concerns re. facilities and arrangements

Debrief with Clerk of the Course

Complete Report Form and return to BHA

Raise any serious concerns with BHA Inspector

4. ENTRIES (Regulations 90-95)

ENTRY FORMS/SCRUTINY OF ENTRIES

4.1 It is essential that entry forms contain a reference to the Owner/Keeper agreeing to be bound by the Regulations for Point-to-Point Steeplechases.

The PPA does not examine the qualification of horses for any races but will assist Entry Secretaries and Receivers of Entries in clarifying any points over which there is any doubt. Receivers of Entries should check, as far as possible, the eligibility of the horse for the race in question. The responsibility for making an entry correctly (and ensuring it has been received) lies with the person making that entry.

The Receiver of Entries should know that an owner may enter or run a horse under an assumed name only if it is incorporated into one of the following titles:

"The ..... Family"

"The ..... Friends"

"The ..... Partners"

"The ..... Partnership"

"The ..... Group"

"The ..... Club"

When entering or running horses under one of the above titles one of the owner's names must be given after the title (e.g. The .....Club (Mr J Smith). In addition any assumed name must not be offensive and must not have any commercial implications. If the Entry Secretary is in any doubt as to whether or not to accept an entry under a group name the PPA should be consulted. The responsibility for making a correct entry under a group name lies with the person making the entry.

HUNTER CERTIFICATES

4.2 Hunter Certificates must be registered at the Racing Calendar Office (Weatherbys) by noon on a Thursday to qualify the horse concerned to be entered in Point-to-Point races closing on or after the following Saturday.

DIVISION OF RACES AT ENTRY

4.3 The Entry Secretary must contact the Stewards if it is considered that the number of entries received for a race is likely to entail a greater number of horses starting than the Safety Factor allows. The Stewards may then instruct the Entry Secretary to divide such a race. The division should be made, prior to the printing of the Racecard, by randomly drawing the entries by lot into two equal divisions, except that if any Owner/Keeper (if indicated on the Entry Form and/or Racecard) has two or more entries they shall be, as far as possible, kept apart.

Entry Secretaries must not alter the make-up of divisions to suit riders if contacted directly by riders. A race cannot be divided if the number of declared runners does not exceed the Safety Factor.

The prizes for each division of the race shall be the same as those advertised for the original race.

DIVISION OF RACES AT DECLARATION (REGULATION 113) & BALLOTING PROCEDURES

4.4 If, on the day of the Meeting the number of declared runners exceeds the Safety Factor, the Stewards shall order a division to be carried out and deadlines for declarations put back to the appropriate later time(s). A race cannot be divided if the number of declared runners does not exceed the Safety Factor.

The division should be made by randomly drawing the declarations by lot into two equal divisions and these shall be run consecutively. However, in exceptional circumstances (i.e. with the declarations only just exceeding the Safety Factor and where the Stewards have already decided that any second division may result in the non-completion of all races), the Stewards may choose to 'ballot out' (by randomly drawing lots of the horses declared that have Hunter Certificates registered with the host area) the necessary horses so that only one 'division' need be run but with the maximum number of runners as governed by the Safety Factor. This ensures that as few owners as possible are subsequently disappointed by not getting a run.

Organising Committees cannot state in their race conditions that balloting will definitely occur.

The number of runners in any race cannot exceed the Safety Factor and the Stewards cannot raise the Safety Factor on the day.

DIVISION OF RACES ON THE DAY (REGULATION 111 (ii)) – RIDERS PREFERENCES

4.5 If on the day of the Meeting it is anticipated that the number of declared runners in a race is likely to exceed the Safety Factor, a rider can be declared to ride two or more horses with the anticipation of riding one horse in each division. If a rider is declared for more than one horse, the rider must, at the time of the subsequent declarations, state their order of preference to the Declarations Clerk and inform the owners accordingly.

The procedure for the double declaration of riders is outlined in Instruction 8.3 'Declarations Clerk'.

5. THE MEETING

GENERAL REMARKS

5.1 All Stewards and Officials must be in possession of or have access to the most recent BHA Regulations for Point-to-Point Steeple Chases (and details of any subsequent amendments), the most recent Instructions (and amendments) and any directives which concern them that are issued from time to time. Each Fixture Secretary will receive four copies of the BHA Instructions, four copies of the Regulations and details of all amendments, and these must be distributed accordingly. Additional copies of all documents are available on request from the PPA. Alternatively, an up-to-date copy of each document is accessible on the BHA website http://www.britishhorseracing.com or the National Point-to-Point website: https://www.pointtopoint.co.uk

The Regulations lay down certain specific duties and responsibilities of Stewards, Clerk of the Course, Judge, Clerk of the Scales and Receiver of Entries, and other requirements which affect them. It is the responsibility of the Organising Committee to ensure that all persons acting in any official capacity in connection with the organisation and running of any Meeting are properly briefed as to their duties and areas of responsibility. With this in mind, Fixture Secretaries MUST forward copies of the Regulations and BHA Instructions (and all subsequent amendments) to their key officials as soon as they have been sent them for the forthcoming season.

Fixture Secretaries are expected to provide Officials with all forms necessary for the day's racing with the exception of: Stewards Enquiry forms; RMO's reports forms; Veterinary report forms and BHA Local Inspectors' forms.

ADMISSION CHARGES FOR BOOKMAKERS

5.2 The attention of Organising Committees is drawn to the following:-

'Under the provisions of the Betting Act of 1963, where a Totalisator is in operation, it is provided that: `the persons having the management of such racecourse shall provide a place where bookmakers may carry on their business and to which the public may resort for the purpose of betting, and that the charge to a bookmaker and to any assistant accompanying him, for admission to an enclosure on the racecourse for the purpose of the bookmaker's business shall in the case of the bookmaker, not exceed five times the amount, and in the case of an assistant not exceed the amount of the highest charge made to members of the public for admission to the enclosure'.

WITHDRAWAL OF DECLARED RUNNERS

5.3 It is essential that when any horse is withdrawn the representative of the Totalisator and bookmakers be informed and an announcement made for the benefit of the public in order that betting on that horse can cease immediately.

WEIGHING IN

5.4 The Clerk of the Scales shall not weigh in a rider for any horse until they receive notification of the first four placed horses. This information should be relayed by the Judge by radio to the Clerk of the Scales who will repeat the message back to the Judge.

Note: The Clerk of the Scales and/or the Stewards have at their discretion the option to order all riders to weigh in.

BROADCAST RUNNING COMMENTARIES

5.5 The Clerk of the Course should ensure that the commentator ceases his commentary JUST before the horses pass the winning post. In close finishes they should in no circumstances give out on the Public Address system their version of the placings, thereby pre-empting the decision of the Judge. Neither should they make any other comment before, during or after a race which may wrongly interpret or pre-empt the actions of any Official on duty.

ANNOUNCEMENTS/COMMUNICATION

5.6 Announcements should be made to convey racing information to the general public and should not, except in exceptional circumstances, be used as a means of contacting or passing on information to raceday Officials.

All key Officials should be provided with a radio communications system and should be fully briefed as to how to use them. The use of different channels to avoid cross communication and aid clarity is also recommended.

Whilst not definitive, key officials requiring radios would include:

Stewards, Clerk of the Course, Fixture Secretary, Clerk of Scales, Starter, Judge, RMOs, Ambulance Crew, Vets, Incident Controller (IC), Recovery Vehicle Driver and Horse Ambulance Driver.

In addition, the designated person tasked with carrying out the stop-race procedure and fence attendants if, due to the topography of the course, their fence is potentially ‘unsighted’. Horse catchers should also be provided with a radio if they do not possess a mobile phone.

Public Address Systems and Speakers should not be deployed in such a way that the noise is liable to ‘spook’ or upset horses even at normal broadcasting sound level.

COMMERCIAL VIDEO OPERATORS

5.7 Should a commercial video operator wish to operate at a Meeting they should:

(a) Liaise with the Clerk of the Course as to where the unit may be located.

(b) Ensure that the unit is not located 'head on' or in line with the finishing post.

(c) Ensure that in the case of an objection or a Stewards' Enquiry viewing facilities are switched off until the outcome of the enquiry is made known.

HEAD CAMERAS (JOCKEY CAM)

5.8 Head Cameras cannot be worn by any rider in any race unless prior permission has been obtained from the PPA, which will only be granted in exceptional circumstances.

Such a request must be made at least 4 weeks in advance of the Meeting stating the respective race(s) in which it is to be worn*; the type of Head Camera to be worn* (with specifications); and the purpose for which the footage is to be used.

USE OF VIDEO RECORDINGS BY STEWARDS

5.9 **Video evidence may be considered and used at the Stewards' discretion**

If the Stewards view footage:

i. in advance of the hearing, they should ensure that it is made clear at the start of the enquiry as to what they have viewed and what can be seen. If it is possible, the person(s) subject to the enquiry should also be offered the opportunity to view the footage;

ii. after hearing the evidence, they should advise the person(s) when giving their decision that they have viewed the footage.

FORM/BETTING INFORMATION

5.10 It is strongly recommended that Area Secretaries coordinate the retention of weekly national Point-to-Point form within their Area so that this may be used by the Stewards when considering a 'running and riding' enquiry under Regulations 125-128.

Furthermore, Organising Committees are strongly encouraged to nominate an individual (a 'Stewards' Assistant') whose duties at the Meeting will include briefing Stewards on:

(i) Stewards' Enquiries that have occurred earlier in the Season across all Areas;

(ii) The odds for each horse and providing details of any significant moves (either 'shortening or lengthening') in the betting market before each race.

Note: As a rule of thumb a significant move is considered to be any instance where a horse's odds have halved or where those of one of the market leaders have doubled.

RIDERS REPORTING TO A DOCTOR (RMO) AFTER A FALL

5.11 Organising Committees are asked to nominate an individual whose duties at the Meeting will include recording the details of all fallers and unseated riders in every race. This will assist the (S)RMO so that they are fully aware of which riders need to present themselves for medical inspection. Riders who have had a fall and have not sought out the (S)RMO for an assessment must not be weighed out for any subsequent rides on the day and should be reported to the Stewards, so as they can be fined.

RACEDAY RIDER TESTING

5.12 On occasion rider testing for drugs and/or alcohol will be conducted during the Meeting in the form of either urine or breath testing. The Fixture Secretary will be notified on the Thursday before racing and the Meeting must provide:

- a fixture Liaison Officer ('FLO'), who will assist with the sampling process
- a covered area with chairs and table
- for urine testing additional space for sampling with access to toilet

Rider testing will be conducted by an external Testing Unit. The Testing Unit will arrive 120 minutes before the first race and report to the Fixture Secretary. The Fixture Secretary will inform the Senior Steward of their arrival and confirm that rider testing is being conducted.

The Testing Unit will be prepared to commence testing 90 minutes before the first race. The FLO should be available at this stage. The Testing Unit will provide and put up signs at changing rooms, Declarations and Scales stating that testing is being conducted. The Testing Unit will be booked for the entire day and, once testing is complete, the FLO can be stood down.

<u>Procedure – urine testing</u>

The FLO will be provided with a list of riders selected for testing. The FLO will provide a copy to the Declarations team, who will notify the listed riders that they will be required to provide a urine sample as soon as practicable and obtain each rider's acknowledgement. The rider must provide a sample at any time up until 30minutes after the last race and should be encouraged to report to the Testing Unit within good time. Under 18s are entitled to request that a guardian attend. The Testing Unit will explain the sampling process to the rider and conduct the testing.

If a rider fails to report to the Testing Unit after being notified of testing or fails to provide the required sample then the Stewards should refer the matter to the BHA for investigation.

<u>Procedure – breath testing</u>

All riders will be required to undertake a breath test before weighing out. The FLO will inform the Clerk of the Scales of a failed test and the rider will be stood down for the day. A rider can be required to undertake additional breath tests throughout the day.

The Stewards should report any failed breath tests to the BHA.

INSPECTION PROTOCOL AND POSTPONEMENT/ ABANDONMENT OF MEETING

5.13 Communication should take place between Organising Committees and the Senior Steward ahead of the Meeting. An inspection should be called if any part of the course is unfit for racing (e.g. frost, water logging or hard ground). Announcements, through social media and associated websites should be made ahead of an inspection with a follow up announcement with the result.

If the course is unfit for racing but the view is that it may be suitable by the day or the start of the Meeting; the announcement should make it clear that a further inspection is required to ascertain if racing can take place. No announcement should indicate racing is to take place unless all those present are satisfied that this is the case.

Inspections should be arranged at the best possible time so as the participants and the racing public have an early and clear indication as to the likelihood of racing going ahead.

Any decision over the fitness of a course and the possible postponement/ abandonment of racing should be a collaboration between the Organising Committee, the Stewards and, if the decision is being made on the day, the Local Inspector. For the avoidance of doubt the final decision of racing continuing rests with:

1. The Organising Committee up to 2hrs before the first race; and
2. After this time with the Stewards.

If the postponement/abandonment of the meeting is necessary, the Organising Committees must announce the postponement/abandonment without delay. If the Local Inspector was not a party to the decision they should also be notified immediately.

Instruction 1.2 highlights the process for the rearrangement of a postponed fixture. Organisers should follow this PPSA approved process prior to formally confirming any new date.

6. HEALTH AND SAFETY

INTRODUCTION

6.1 Organising Committees must be aware of the DCMS Guide to Safety at Sports Grounds ('The Green Guide') as the Organising Committees are ultimately responsible for compliance with legislation or government guidance relating to Health and Safety issues. Chapter 18 of the 'Green Guide' makes specific recommendations in relation to First Aid and Medical provision for spectators.

Organising Committees are strongly encouraged to compile an up-to-date Health and Safety plan. The plan should include risk assessments and highlight (preferably pictorially) the division of responsibilities of key organisers/officials. Care needs to be taken to clarify who is responsible for the racing itself, and who is responsible for the control of the overall event and site on the day. **Where a previous risk assessment has been updated, the document should clearly show that it has been updated, by whom and the date upon which it was carried out.**

All employers and public liability insurances should be prominently displayed.

THE PUBLIC

6.2 Organising Committees must ensure that adequate procedures are in place for the safety of the public. It is suggested that members of the public and unauthorised staff should at all times be segregated from horses moving between the horse box park, race track, parade ring (which should also be provided with a child resistant fence and have access points suitably manned) and unsaddling enclosures if applicable.

All children under 12 years of age are to be excluded from the parade ring/unsaddling enclosure and a sign to this effect must be displayed. Organising Committees may increase this minimum age at their discretion. (see Instruction 3.8 'Construction of Parade Rings').

THE COURSE

6.3 In respect of the course itself it is suggested that adequate protection be provided for both the public and the horses and riders. How this is achieved will vary depending on such factors as location, proximity to public areas and the degree of risk to riders from obstacles and/or natural features (e.g. rivers) around the course.

Organising Committees must ensure that there are proper control measures in place at all access/crossing points where the horses and public can interact e.g. cars driving into the infield, public crossing points on horsewalks, etc.

Track surfaces must be inspected before each Meeting to ensure they are as level as possible. Inequalities in the surface, such as ruts or rabbit holes can prove dangerous both to horse and rider and must be eliminated.

LOADING AND UNLOADING OF HORSES

6.4 An area for the safe loading and unloading of horses must be provided in a clearly defined horse box park.

MEDICAL RESOURCES

6.5 Medical Resources must be in accordance with Instruction 10 'Medical Arrangements' and prepared in consultation with the course's Senior Racecourse Medical Officer (SRMO) and the BHA Chief Medical Advisor.

ORGANISERS' VEHICLES

6.6 Organising Committees should ensure that they or their agents comply with legislation or government guidance relating to Health & Safety issues with regard to the transportation they use at the venue on a raceday. This may include the wearing of helmets and/or non-transportation of passengers on ATV 'Quad bikes'.

LOOSE HORSES

6.7 The actions of loose horses are impossible to predict. However, horses that have fallen, unseated etc. may show a tendency to run back towards the horsebox area or horse entrance/exit to the course. If the public have access to these areas, Organising Committees should ensure that they are adequately protected. Organising Committees should also consider the adequacy of the venue's perimeter security in relation to loose horses and nearby public highways or natural features (e.g. rivers).

Horse catchers provided by the Organising Committees should be properly briefed as to their raceday function and, if possible, should aim to prevent loose horses from running back towards the oncoming field. Horse catchers should be equipped with a radio or mobile phone. **Horse catchers should remain on course throughout racing until officially released after the last race.**

Owners/keepers, or their representatives, must ensure when a horse is being led in any area used for the purposes of the Meeting, that the horse is fitted with a bridle or a headcollar fitted with a chifney to enable it to be led properly. An individual may lead only one horse at any time.

SERIOUS INCIDENT/FATALITY MANAGEMENT

6.8 Organising Committees must consider in advance and have procedures in place for dealing with any serious incident or fatality occurring during a race. Such procedures must, as a minimum, appoint an **Incident Controller (IC)** who will attend every such incident and be responsible for taking charge of controlling the incident in accordance with the Point-to-Point Incident Management procedures at Appendix (6)A.

Unless special dispensation has been granted by the BHA, all Incident Controllers must attend one training course every two years put on jointly by the BHA and PPA

Organising Committees must ensure that they have included in all applicable documentation and made all appropriate personnel (SRMO, SPVS, IC, Clerk of the Course, Fixture Secretary) aware of the 'What3Words' (www.what3words.com) location of the course and, more specifically, the emergency helicopter landing point.

At an appropriate time on the day the following persons should be notified when any serious incident or jockey fatality occurs:

CEO PPA (Paul Miller)	by Fixture Secretary
BHA Inspector/BHA Executive	by Local Inspector
BHA Chief Medical Adviser	by SRMO

*Horse fatalities should continue to be notified to the BHA Chief Veterinary Adviser by the end-of-day return

Similar procedures, and command structures, should also be in place for dealing with any other major incident at a meeting.

APPENDICES

APPENDIX (6)A POINT-TO-POINT INCIDENT MANAGEMENT

Appendix (6)A

POINT-TO-POINT INCIDENT MANAGEMENT

All Organising Committees must appoint an **Incident Controller (IC)** to take charge of serious incidents occurring in a race. The **IC** is the person responsible on the ground for attending any incident, taking charge of the situation, and thereby allowing the (S) RMO and (S)PVS to focus on their respective casualties.

The Clerk of the Course or, if suitably trained, any other person of the Organising Committee's choosing can be appointed to the position of **IC** but it must not be one of the (S)RMOs or (S)PVSs working at the meeting on the day. It is always advisable to have more than one person trained to act as **IC** so as to cover for illness, injury or multiple incidents in one race at different locations.

If the Clerk of the Course takes responsibility on the day to be the IC a second person MUST be appointed to be their deputy and capable of stepping up and acting as Clerk of the Course in the event of an incident. The Clerk of the Course/Incident Controller have to be seen as two separate roles in the event of an incident.

The **Incident Controller (IC)** must:

- Be suitably positioned on a Rapid Response Vehicle and be amongst the first attenders at an incident;
- Be clearly identifiable as the **IC**;
- Gather information from the attending (S)RMO and (S)PVS and carry out an immediate rapid **(dynamic on site)** risk assessment of the situation;
- Implement any safety critical actions – including Stop-Race/By-Pass/ Hazard Warning;
- Advise the appropriate Officials of any actions taken so as secondary action can be implemented if necessary;
- Ensure the screens are correctly deployed at an appropriate time, position and distance – as agreed with (S)RMO and/or (S)PVS – jockeys need screening as well as injured horses;
- Control access to the 'inner cordon' (usually demarcated by the screens) to essential personnel only;
- Be aware of 'danger zone' around a recumbent horse and ensure nobody enters the 'zone';
- Maintain awareness of fractious, distressed or recovering horses and the potential dangers they may cause to the screen attendants;
- Keep the appropriate Officials appraised of any delay to racing which might be necessitated whilst the incident is ongoing. DO NOT discuss or mention actualities of incident or treatments.

The **IC** is there to **Control, Command, Communicate and Conduct** the response team on the ground so as to ensure everyone's safety and allow the (S)RMO and (S) PVS to do their jobs. The **IC** must understand and stick to their role – *this does not include catching or restraining horses or holding screens.*

In making the decision as to what safety critical actions are necessary – Stop-Race, By-Pass, Hazard Warning – it is essential that the **IC** knows the course, the time that it takes for horses to arrive back at the incident on subsequent circuits, and the time that it takes to implement each action. Regular practice of dealing with Serious Incident scenarios ensures that the **IC** is clear in their role, and that all racecourse personnel are familiar with their own individual responsibilities and the role of the **IC**. All new team members must receive appropriate training to ensure they fully understand the same.

7. HORSES AND RIDERS

PASSPORTS

7.1 **Procedure for Checking**

Every horse that is in attendance at a point-to-point meeting, whether running, working or showing, must be properly vaccinated in accordance with Regulation 36 and have their passport available for inspection if required.

Any Owner/Keeper whose horse is not properly vaccinated or whose horse's passport is unavailable on request may be reported to the Stewards and fined, their horse stopped from running or their horse ordered off the course.

All Stewards and Officials are advised to acquaint themselves with the procedures.

(a) BHA Veterinary Officers team will carry out random checks during the Season.

(b) The Veterinary Officer will inspect the vaccination and markings sections of the passport of selected horses declared to run. They may, at their discretion, also inspect the passport of any other horse on the course.

(c) Every Owner/Keeper who fails to produce a passport, or produces a passport from which the Veterinary Officer cannot identify the horse or contains incorrect or incomplete vaccination details, will be reported to the Stewards by the Veterinary Officer either directly or through the Clerk of the Course/Secretary.

(d) The Stewards will hold an enquiry and interview the respective Owner/Keeper and the Veterinary Officer who has checked the passport.

(e) The Stewards should take the following action:

(i) If the Veterinary Officer reports that they cannot identify a horse from its passport the Stewards should establish from the Owner/Keeper if they have an explanation for the discrepancy, prevent the horse from running, and refer the matter to the BHA.

(ii) If an Owner/Keeper is unable to produce a passport, the horse MAY run but the Stewards will fine the Owner/Keeper £100 (Regulation 38(ii).

(iii) If the Veterinary Officer reports a horse's vaccinations as not complying with Regulation 36, the Owner/Keeper should be warned about ensuring future compliance. If the horse has received no vaccinations at all or has received any vaccination on the day of the race or in the preceding six days the horse must also be ordered off the course.

Note: The Stewards DO NOT need to impose any fines upon Qwners/Keepers relating to incorrect vaccinations because as of the 2025/26 Season all horse entered in a point-to-point will have had their vaccinations checked and cleared in advance. NO HORSE WHOSE VACCINATIONS HAVE NOT BEEN CLEARED BY 4:00PM ON THE PREVIOUS THURSDAY WILL BE ALLOWED TO RUN.

(f) Fines should, wherever possible, collected on the day and sent to the PPA.

(g) On those occasions where it is discovered after a race that there are concerns over a horse's identity, the Stewards should hold an enquiry and refer it to the BHA. It is a technical objection and the Stewards do not have the power to alter the result whether it concerns a horse in the placings or an 'also ran'.

TYING DOWN OF HORSES' TONGUES

7.2 (a) When a horse is to run with its tongue tied the Owner/Keeper is responsible for indicating to the Declarations Clerk if they wish the horse to be withdrawn if the tongue strap cannot be fastened or is shed on the way to the start. It is the Starter's responsibility to take a final decision as to whether or not any horse should run in these circumstances but, in reaching that decision, he will take note of any such notification by the Owner/Keeper.

(b) On every occasion when a horse is to run with its tongue tied, the Owner/Keeper is responsible for showing the horse, with its tongue tied, to the Veterinary Surgeon on duty on the course before it is allowed to proceed to the start. The (S)PVS should report to the Stewards any person who fails to present their horse.

Disciplinary action will be taken against any Owner/Keeper who fails to comply with this requirement on each occasion that their horse runs with its tongue tied.

(c) When no declaration of tongue strap has been made a tongue strap must not be worn by the horse in the Parade Ring, on the way to the start or during the race. In the event of non-compliance the horse should be allowed to run but the Owner/Keeper must be fined not less than £75.

(d) Horses should not run with tongue straps, or other similar devices, which encircle the horse's tongue and are attached either directly or indirectly to the bridle.

(e) (S)PVSs will take note of the bitting of every horse brought into the Parade Ring.

TUBED HORSES

7.3 The BHA does not consider it a safe practice for a tubed horse to run in any form of Martingale. Should a tubed horse wearing a Martingale be presented at the start the Starter shall remove the Martingale before the race. A tubed horse may not run unless the plug in the tube has been removed.

ADVERTISING

7.4 No quarter sheet or rug used in the Parade Ring at any Meeting may bear the name or initials of the Owner/Keeper in letters larger than 4 inches high. No garment worn by the attendant may bear the name or intials of the Owner/Keeper in letters larger than $1^1/_2$ inches high. No other form of advertisement will be permitted either on the horse, its rider, its clothing, or its attendants, except that:

(a) Organising Committees may provide sponsored number cloths in line with the criteria within Appendix L of the Regulations;

(b) horses that have been formally sponsored by businesses under the PPA's 'Horse Sponsorship Scheme' (HSS) may carry

- rug and sheet sponsorship;
- attendants may carry the same sponsorship logo on clothing (sweatshirts, polo shirts, jackets) and baseball caps; and
- owners' colours may carry sponsorship on the collar and chest sites;

at all times in line with the criteria within Appendix L of the Regulations;

(c) riders formally sponsored under the PPA's 'Rider's Sponsorship Scheme' in line with the criteria within Appendix L of the Regulations;

(d) after the race, Race Sponsors' paddock sheets and rugs may be used.

QUALIFICATION OF RIDERS (REGULATION 50-55)

7.5 (a) **Riders Qualification Certificate (RQC)**

The RQC application paperwork is available to download at the national Point-to-Point website www.pointtopoint.co.uk (via the Guides and Downloads menu under the Jockey tab); at www.gopointing.com/jockeys; or from the PPA office by emailing info@p2pa.co.uk or calling 01793 7819 90. When any declaration to run is made all riders will have to provide proof of their qualification under Regulation 50. This must be in the form of an RQC for the current Season, signed by the rider to the effect that he agrees to be bound by the current Regulations.

Note: The colour of the current Season's RQC will be the same as the colour of the current Regulations

The RQC will also state in what respect the rider is eligible (e.g. as a Member, Subscriber etc.). If the rider is to ride in any race for which their RQC does not state their eligibility, they must submit written proof of their qualification to ride which has been signed by the relevant Hunt Secretary. The BHA may require applicants to undergo a riding assessment to achieve their RQC.

ORGANISING COMMITTEES MUST APPOINT AN OFFICIAL ON RACEDAY (E.G. DECLARATIONS CLERK) TO CHECK ALL RQC's. AMATEUR OR IRISH LICENCES ARE NOT ACCEPTABLE.

Regular Serving Members of Her Majesty's Forces or members of Clubs, Associations or Societies must also provide evidence as to their qualification for races open to such organisations.

On those occasions when a rider has left their RQC behind the declaration to run can only be accepted if the rider signs a declaration (see Appendix (8)A) that they are qualified to ride in the race in question. The necessary declaration, to be signed by the rider, should be provided by the Declarations Clerk. Disciplinary action will be taken against any rider who signs a false declaration.

(b) **Riders Qualification Certificates for Hunt Members Race**

Organising Committees must ensure that riders, who hold an RQC valid for the Hunt Members Race or Members Race Across Natural Country only, surrender this 'one-off' Certificate to the Declarations Clerk.

(c) **Riders Medical Record Books**

Riders Medical Record Books are issued by the BHA and remain the property of the BHA at all times. Medical Record Books are to be collected by the Declaration Clerk before the rider's first ride and retained by the Declarations Clerk until the rider has finished riding for the day. They must only be returned when the (S)RMO has confirmed that no medical entry is required.

Declarations Clerks must check the Medical Record Book to ensure that the rider is not subject to a medical suspension period on the day of racing and has been passed as fit to ride.

Any rider who has left their Medical Record Book behind shall not be permitted to ride.

Note: A rider may only hold one RQC and one Medical Record Book issued by the BHA.

SKULL CAPS (REGULATION 115 (ii))

7.6 The only approved pattern of Skull Caps for riding in races is one which meets with at least two different international testing standards (see table below) and has evidence of Quality Testing from organisations such as BSI, INSPEC, SNELL, SEI.

A Skull Cap must comply with at least one standard from Group A AND at least one different standard from Group B.	
Group A	**Group B**
British standard PAS 015 2011 and any subsequent updates.	British standard PAS 015 2011 and any subsequent updates.
European standard (EN): UKCA and/or CE marked products referencing harmonised standard EN1384:2023.	European standard (EN) UKCA or CE marked products referencing harmonised standard EN1384:2023.
European standard (EN): UKCA and/or CE marked products referencing the VG1 performance specification. (NB VG 1 will be withdrawn as an acceptable standard on 1 June 2025)	European standard (EN) UKCA or CE marked products referencing the VG1 performance specification. (NB VG 1 will be withdrawn as an acceptable standard on 1 June 2025)
	American ASTM F1163: 2015 and any subsequent updates.
	American Snell E2016 and any subsequent updates (Please note: Snell combines a standard with subsequent quality testing; therefore no additional quality testing mark is required).

As the Skull Cap is designed to absorb the energy of any impact by partial destruction, any Skull Cap which has been subjected to a severe impact or has been worn by a rider suffering concussion will not be regarded as being in serviceable condition and should be discarded.

The Skull Cap must be of the correct fitting for the individual rider, the harness must be correctly adjusted and the chin-strap fastened at all times when mounted. The chin strap must pass under the jaw and be attached to the harness by a quick release buckle. Metal hooks are expressly forbidden. Skull Caps must not have a chin cup, cradle or draw lace.

During the current Season, each Point-to-Point Area must nominate at least one fixture and arrange for Skull Caps to be checked.

Any queries on Skull Cap specifications should be directed back to the PPA who will take up the matter with the BHA.

BODY PROTECTORS (REGULATION 115(iv) and APPENDIX C OF THE REGULATIONS)

7.7 All riders are required to wear a Body Protector which meets the following Standard:

(BS) EN 13158: 2018.

The minimum acceptable standard for a Body Protector is Level 2. Body Protectors must not be modified in any way and must be in a serviceable condition. There is a 4lb weight allowance given for the Body Protector.

During the current Season, each Point-to-Point Area must nominate at least one fixture and arrange for Body Protectors to be checked.

Any queries on Body Protector specifications should be directed back to the PPA who will take up the matter with the BHA.

USE OF SPECTACLES AND CONTACT LENSES

7.8 In the interests of safety the BHA, having taken expert medical advice, has decided that no person shall ride in a Point-to-Point wearing spectacles or lensed goggles. In the case of people wishing to ride in contact lenses, the BHA directs that the lenses must be of the soft type.

WHIPS (REGULATION 13 (xi) & 117)

7.9 Only whips which fall within the following specifications are approved:

(e) A maximum length, including the flap, of 68cms

(f) A minimum diameter of 1cm

The only additional feature which may be attached to the whip is a flap. If a flap is attached it must fall within the specifications below:

(g) A maximum length of flap from the end of shaft of 10cms

(h) A maximum width of flap of 4cms, with a minimum width of 2cms

(i) The flap from the end of the shaft must not contain any reinforcements or additions

(j) There shall be no binding within 23cms of the end of the flap

(k) The contact area of the shaft must be smooth, with no protrusion or raised surface, and covered by shock absorbing material throughout its circumference such that it gives a compression factor of at least 6mms

(l) The flap must have similar shock absorbing characteristics to that of the contact area;

(m) The overall weight must not exceed 160gms.

Clerks of the Scales will from time to time check the whips used by riders to ensure that they fall within the approved specifications. These checks will be carried out at the time of weighing out and any rider found with a whip which does not conform will be required to find an alternative whip which does comply.

SPURS

7.10 The BHA will not permit spurs of any type to be used in any race.

Stewards are asked to watch for the use of any type of spurs when riders are either weighing out or in the Parade Ring.

BLINKERS/HEADGEAR/RED HOODS (APPENDIX R OF THE REGULATIONS)

7.11 Owners/keepers are required at declaration to declare if their horse is to wear headgear of any kind – blinkers, eye shield, hood **(incl. red hood)**, visor, eyecover or sheepskin cheek pieces – or any combination thereof.

Clerks of Scales, Declaration Clerks and Stewards in particular are asked to take note of the requirements of Regulation 119 and Appendix X.

Red Hoods – where a red hood has been declared the Declaration Clerk should remind the owner/keeper that the hood MUST be removed at the start and to ensure that they send somebody down to the start to remove it/collect it.

8. OFFICIALS: CLERK OF THE COURSE; CLERK OF THE SCALES; DECLARATIONS CLERK; VALET; STARTER; JUDGE; FENCE ATTENDANTS; STEWARDS

CLERK OF THE COURSE

8.1 The Clerk of the Course shall make all the necessary arrangements, as directed by the Organising Committee, to ensure that the Point-to-Point course is fit for racing on the day, as per these Instructions. and detailed below. Unless special dispensation has been granted by the BHA, all Clerks of the Course must attend one training course every two years put on jointly by the BHA and PPA.

(a) **Safety Factors.** The safety factors are to be determined with the BHA Inspector in time for the publishing of the National Point-to-Point & Hunter Chase Race Planner. Pre-determined Safety Factors which have been agreed with the BHA Inspector must not be increased on the day of racing.

(b) **State of the Going.** The state of the going should be confirmed and displayed on the numbers board having walked the course with the Chair of the Stewards. The going description must comply with the terminology currently used under the Rules of Racing. (i.e. Hard, Firm, Good to Firm, Good, Good to Soft, Soft, Heavy).

NOTE: WATERING SHOULD TAKE PLACE TO AVOID HARD GROUND. IF THE GROUND IS CONSIDERED TO BE OFFICIALLY HARD THE MEETING MUST BE ABANDONED/POSTPONED.

(c) **Briefing.** The Clerk of the Course has the responsibility at the beginning of the day to hold a briefing for all staff working on the racetrack on the use of each of the respective flags, the procedures for marking hazards at fences and directing the field around them (including the blowing of a Fox 40 whistle) and the emergency procedure for stopping a race. A ‘Clerk of the Course Briefing Checklist’ is at Appendix (8)K.

The briefing MUST include a practical demonstration at a fence.

Prior to the briefing, the Clerk of the Course, SRMO, SPVS and Incident Controller (IC) should meet face to face to plan the management of any entrapment or serious incident. Thereafter, at the briefing the SRMO and SPVS, **if able to attend**, should be asked to add their own comments. The Local Inspector should also be in attendance.

Note: At fences where direction markers are deployed arrangements should be made for either the IC, Clerk of the Course, their assistant or a Steward to be present where possible.

(d) **Weighing Room/Tent.** The following are displayed prominently in the weighing room:

(i) a direction marker and a chequered flag, together with the notice for the marking of hazards at fences;

(ii) a stop-race flag and a notice for the stop-race procedure;

(iii) a clear plan of the course, indicating at each fence which side the field will by-pass in an emergency.

(e) **Medical Personnel.** The Clerk of the Course will ensure that the course allows access to ambulances throughout, or alternatively provide suitable locations to give ambulance coverage for the whole course.

The Clerk of the Course is also to ensure that a tractor, capable of towing an ambulance, is available in case of difficult conditions. This tractor is not to be used routinely to tow ambulances during racing in bad conditions. If the ambulances are unable to reach all parts of the course unassisted racing should be abandoned.

The Clerk of the Course shall ensure that:

(i) (S)RMOs have a vehicle to transport them to any part of the course when their services might be required as indicated by a flag or, where necessitated, by radio;

(ii) medical personnel have a minimum of four radios between them – two for the (S)RMOs and two for the ambulances

(iii) medical treatment facilities are located adjacent to the weighing room/jockeys' changing area.

(f) **Veterinary Personnel.** The Clerk of the Course shall ensure that (S)PVSs:

(i) have access to all parts of the course or have suitable locations provided to give veterinary coverage for the whole course;

(ii) do not leave the course until all horses have been accounted for after the last race, and all requests for veterinary attention have been dealt with;

(iii) have a suitable high-sided, covered recovery vehicle with specified driver who must remain with the vehicle throughout racing;

(iv) have a horse ambulance with towing vehicle and specified driver, who is experienced in handling horses and must remain with the vehicle throughout racing. The horse ambulance must have been regularly serviced, contain partitions to allow an injured horse to be fully supported and have a front ramp so the horse can be unloaded in a forward direction. In the event that the horse ambulance becomes unavailable, on agreement with the SPVS, a suitable trailer may be used but must still have the requisite front ramp.

Note: No race should be commenced until the horse ambulance is in position.

(v) are ideally provided with screens at the last two fences, on the Rapid Response Vehicle, horse ambulance and recovery vehicle, and at the unsaddling enclosure and Parade Ring;

Note: Ideally, a minimum of seven (7) screens should be available on every course. They should be 8' high with windows

and, those who may have to utilise them, to have received practical training in their use

(vi) are provided with ABUNDANT SUPPLIES OF FRESH, COOL WATER with which to treat horses potentially suffering from heat exhaustion.

Water should be positioned adjacent to the Parade Ring, unsaddling enclosure, between the pull up and unsaddling enclosure (at a site agreed with the SPVS), and at the horse box park. Ideally it should also be available at the last two fences. Water must also be carried on the horse ambulance and on the Rapid Response Vehicle.

Static supplies may be provided in the form of ICBs or water butts, with buckets.

(vii) are all provided with a radio

(g) **Starter/Re-call Man.** The Clerk of the Course shall brief the Starter and Re-call Man, particularly in relation to the passage of information on the withdrawal of any horse, and provide each with a flag.

(h) **Stewards' Enquiries.** The Clerk of the Course or his nominated representative may be present at all Stewards' Enquiries. The Clerk of the Course or his nominated representative should inform the Clerk of the Scales of any decision on an objection.

(i) **Communication Systems.** The Clerk of the Course must arrange the distribution of radio handsets (as provided by the Organising Committee) to all relevant Officials (see Instruction 5.6 'Announcements/Communication'.

(j) **Race Timing.** It is recommended that the Clerk of the Course is to appoint an individual who is to be responsible for timing the race.

(k) **Stop-Race Procedures.** The Clerk of Courses must discuss the stop-race procedures with the BHA Inspector and Local Inspector and agree the most appropriate position for the placement of the stop-race flags and Fox 40 whistles around the course. **A minimum of three(3) stop-race flags should be positioned around the course.**

When there is a major hazard ahead which is unavoidable and, in the opinion of the Clerk of the Course or Incident Controller (IC), necessitates stopping a race, a yellow and orange 'Stop-Race Flag' must be deployed and waved by a pre-determined persons on the instruction of the Clerk of the Course or IC. In addition, the persons waving the flag must blow a Fox 40 whistle to ensure riders are aware of their presence. Clerks of the Course are responsible for the specific operating procedures and training that they put in place to optimise the deployment of stop-race flags. **Once the 'Stop-Race' procedures have been implemented all of the stop-race flags positioned around the course should be waived.**

Stop-race procedures must be clearly highlighted in all relevant documentation compiled, circulated and displayed by the Clerk of the Course.

Note: It is possible that situations may arise during which riders see both the black & white chequered flag ('Hazard Ahead') and the yellow & orange flag ('Stop Race') being intentionally waved by different racecourse personnel at the same time. In such cases, the

‘Stop-Race Flag’ always takes precedence.

(l) **Farrier.** A farrier must be in attendance at all Meetings and readily available to deal with emergencies, such as spread plates. Any removal of plate at the Start is to be carried out by the farrier or (S) PVS. Farriers are to be made aware of their duties and provided with a suitable radio, along with a copy of Regulation 116.

Racing shall continue in the absence of a farrier; however, this must be reported to the BHA by the Stewards

(m) **Horse Disposal.** The Clerk of Course must have a designated area, agreed in advance with the Local Inspector, for the placement of dead horses during the day, which is both secure and inaccessible to the public. All dead horses must be covered at all times so that aerial photos cannot be taken. The recovery vehicle should not keep dead horses on board or try to drag a second horse onto the first at the site of the incident. No race should be started until such time as the recovery vehicle is empty and back in position.

(n) **Rapid Response Vehicle.** The Clerk of the Course must ensure that a four wheel drive vehicle is provided to the person designated by the Organising Committee as the Incident Controller (IC), so as they can rapidly attend any incident and take control of its management on the ground (see Appendix (6)A ‘Point-to-Point Incident Management’).

The Rapid Response Vehicle must also carry screens and water.

(o) **General.** The Clerk of the Course must ensure that:

(i) the correct equipment for the marking of hazards and alerting the emergency services is placed at each fence in sufficient time for the Local Inspector and Stewards to view when walking the course prior to racing, and that the black and fluorescent yellow direction markers point towards the correct side of the fence for the field to by-pass in an emergency;

(ii) extra course markers are available as necessary in the event that bad weather requires ‘dolling out’ to avoid false or waterlogged patches of the track.

(iii) service vehicles do not use the racing surface (including run-throughs) as a service road except in the case of an emergency. Service vehicles must be parked well away from the racing line and not immediately after a fence, where they could pose a hazard to a rider pulling up or regaining control of his mount after a blunder etc. In addition, they should be parked on the opposite side to that which a fence is to be by-passed.

CLERK OF THE SCALES

8.2 The Organising Committee must ensure that the Clerk of the Scales has an accurate (i.e. recently calibrated) pair of weighing scales to work with. The scales must be placed on a firm level surface and checked on site in advance of the Meeting.

CLERKS OF THE SCALES ARE REMINDED OF REGULATION 115 (IV) AND THAT ALL RIDERS WHEN WEIGHING OUT MUST REGISTER AT **4LB MORE ON THE SCALES** THAN THE OFFICIAL WEIGHT THEY ARE DUE

TO CARRY, TO ACCOUNT FOR THE WEARING OF THE APPROVED BODY PROTECTOR.

Duties:

(a) It is essential that the Clerk of the Scales arrives at the Course in plenty of time on the day of racing. This will enable them to deal with any problems and/or queries as to weights or qualifications before the work of the day.

(b) Lined paper on a clip-board, ruled similarly to the Declaration Sheet (Appendix (8)C) will undoubtedly assist the Clerk of the Scales in carrying out their duties. The purposes of the columns are indicated and when used in conjunction with the Racecard will enable an accurate record of the day's events to be available at any time in the future. Block capitals should be used throughout.

(c) When the Declaration Sheet for the race (1 hour beforehand), as completed by the Declarations Clerk, becomes available, the names of the riders are to be written on the prepared paper. A copy of the Declaration Sheet is to be made available to the Judge.

(d) All items carried on the horse's head (i.e. blinkers, hood, visor, sheepskin cheek pieces, eyeshield or eyecover), breast plates, breast girths, martingales and neck straps are all excluded from scale.

(e) The Clerk of the Scales must inform the Judge of any colour change noted as he weighs riders out.

(f) The Clerk of the Scales should carry out occasional checks on riders' whips to ensure they comply with Appendix O of the Regulations.

(g) The completion and return of the 'Marked Card' (see Appendix (11)A) at the end of racing should be clear and concise.

DECLARATIONS CLERK

8.3 The Organising Committee must ensure that the Declarations Clerk is in possession of all the forms necessary (Appendices (8)A, (8)B, (8)C and (8)D to carry out their duties and that they have a table and chair at which they can work.

Duties:

(a) It is essential that the Declarations Clerk arrives at the course in plenty of time on the day of racing. This will enable them to ensure that they have been provided with all the forms necessary to carry out their duties (Appendices (8)A, (8)B, (8)C and (8)D.

(b) It is the responsibility of the Declarations Clerk to accept 'Declarations to Run' (Appendix (8)B). In doing so they should note the extras to be carried (e.g. blinkers, visors, tongue straps etc.) and, if a horse is due to run with a tongue strap, that the Owner/Keeper has indicated on the form if their horse is to be withdrawn if the tongue strap cannot be fastened or is shed on the way to the start.

Where a red hood has been declared the Declaration Clerk should remind the owner/keeper that the hood MUST be removed at the start and to ensure that they send somebody down to the start to remove it/collect it.

(c) THE DECLARATIONS CLERK MUST ENSURE THAT EACH RIDER HAS AN RQC FOR THE CURRENT SEASON AND A CURRENT MEDICAL RECORD BOOK (MRB).

If unable to produce an RQC for the current Season the rider must sign a declaration (Appendix (8)A) that they hold a valid RQC before being permitted to ride.

Where the MRB cannot be produced, the rider shall not be permitted to ride.

(d) The Declarations Clerk must retain all rider's MRBs until each rider has finished riding for the day. THE DECLARATIONS CLERK MUST IDENTIFY THOSE MRBs WHERE THE RIDER IS UNDER MEDICAL SUSPENSION AND REFER THEM TO THE (S)RMO WHO WILL EXAMINE THE RIDER CONCERNED.

MRB's must only be returned when the (S)RMO has confirmed that no medical entry is required.

(e) The Declarations Clerk should ensure they are familiar with the procedure described below for allowing riders to be declared to ride two or more horses in any race when it is anticipated the safety factor will be exceeded and the race will be divided on the day:

(i) When taking declarations the Declarations Clerk may find it helpful to complete the declarations table as per Appendix (8)D. When a declaration is made the Declarations Clerk should scan down the list of previously declared horses and check for any rider that has already been declared. If the rider has been declared for another horse the rider should be asked to state which horse will be ridden (the preferred horse) if the race is not subsequently divided.

(i) The declared rider will then have the responsibility of informing the respective Owner/Keeper of their order of preferred horses and, if the race is not divided, they will then ride his first preference.

(ii) Before declarations close the Owner/Keeper of a non-preferred horse shall then state to the Declarations Clerk whether, in the event of the race not dividing, the horse will be withdrawn or an alternative rider will be substituted.

(iii) The Owner/Keeper shall inform the Declarations Clerk of the name of the alternate rider. The alternate rider will only be able to be nominated as an alternate for one horse and must not have been declared for another horse in the race.

(iv) At the closing of declarations, if the safety factor is exceeded then the race will be divided. The declared rider will ride the horses for which declared unless such horses are in the same division, in which case the non-preferred horse would either be ridden by the named alternate rider or withdrawn as per stated to the Declarations Clerk before declarations closed.

(v) In the event of the race not being divided the non-preferred horse will either be withdrawn or the named alternate rider will be the declared rider.

(vi) In the event of the Owner/Keeper not nominating an alternate rider for the non-preferred ride, the declaration will be invalid and the horse not allowed to run.

(vii) After completing the Double Declarations Table (Appendix (8) D)) and declarations have closed, the Declarations Clerk should complete the Declarations Sheet (Appendix (8)C) and distributed as outlined in (f) below.

(f) When the Declaration Sheet has been completed the Declarations Clerk must make a copy available to the Stewards, Starter and Clerk of the Scales, who in turn will make a copy available to the Judge.

(g) The Declarations Clerk must ensure that for all horses 15 (or more) years old, and for which it is their first run of the Season, a veterinary certificate accompanies the declaration stating that a clinical examination (including listening to the heart) both before and after strenuous exercise has been carried out and that the horse is sound enough and fit enough to present no greater risk whilst racing to themselves, other horses, its jockey and other jockeys. IF NO VETERINARY CERTIFICATE IS PRODUCED IT SHOULD IMMEDIATELY BE BROUGHT TO THE ATTENTION OF THE STEWARDS.

VALET

8.4 Wherever possible a neutral area between the men's and ladies' changing rooms should be provided for use by the Valet.

Any access by the Valet to the respective changing rooms should be kept to a minimum and be in accordance with a strict procedure taking account of the Organising Committee's Safeguarding responsibilities.

STARTER

8.5 The Organising Committee shall make the necessary arrangements to provide the Starter with a Starter's Assistant and a Re-call Man.

Duties – Before the day of Racing

(a) The Starter should contact the Organising Committees well before the day of racing to see if these arrangements have been made. The Assistant's duty is to check, and if necessary, tighten girths or adjust equipment when requested. They are also useful in leading up reluctant horses and generally assisting any rider in difficulty.

(b) It is helpful if the Clerk of the Course puts down a sawdust or chalk line on the ground (or uses two distinctive poles) at the start. This clearly defines the limit beyond which runners may not go before the race actually starts i.e. flag falls.

(c) It is also helpful to the Starter if they have a rostrum. Any stable platform, raised only a few feet above the ground, enables the Starter to see and be seen much better than if they are on the ground.

(d) The Starter should be aware of whether or not a 'flip' start, or any other design of starting gate approved by the BHA is in use.

Duties – Before the First

(e) The Starter should arrive on the course in plenty of time (e.g. an hour and a half before the first race)

(f) The Starter should check they have the correct time.

(g) Immediately on arrival the Starter should report to the Clerk of the Course. This will satisfy the Clerk of the Course that their Starter has arrived and will give the opportunity to pass on any special information e.g. method of getting to and from the start; or action to be taken in the event of a horse being withdrawn before the race has started.

(h) The Clerk of the Course will provide the Starter and Re-call Man each with a yellow and orange flag, and a radio handset should also be provided.

(i) A `flip' start, or other design of starting gate approved by the BHA should be tested before racing starts.

(j) Before leaving the weighing room, the Starter will be provided by the Clerk of the Scales with a Declaration Sheet (see Appendix (8)C). The Starter will indicate these numbers on his Racecard.

Duties – At the Start

(k) The Starter should arrive at the Start in good time; e.g. a quarter of an hour before the first race and ten minutes before the subsequent races. If an approved starting gate is being used the Starter must ensure it is set up properly for each race.

(l) The Starter should satisfy themselves that the Re-call Man knows their duties which are as follows:

- They should normally take up their station with their back to the first fence (any local peculiarities of the course must be taken into account) with their flag lowered.
- When the Starter raises their flag prior to starting the race, the Re-call Man raises their flag above their head and keeps it there until the Starter lowers their flag to start the race. When the Starter lowers their flag the Re-call Man immediately lowers theirs and leaves their position to avoid the oncoming horses.
- The Re-call Man should not leave their position or lower their flag until the signal for the start has been given.

(m) When the runners arrive at the start, the Starter will satisfy themself that all are present.

(n) The Starter should double-check that the appropriate horses are carrying the headgear that they have been declared with.

(o) Before starting the race, it is advisable for the Starter to tell the riders exactly what they intend to do e.g. “I will raise my flag above my head and call you into line. The signal for the start is the lowering of my flag. If you cross the line before I lower my flag, I shall be obliged to re-call you”.

Duties – Starting the Race

(p) When all runners are ready the Starter should check their watch to see that the advertised time for the race has arrived.

(q) They should then glance up the course to see that it is clear and that the Re-call Man is in position.

(r) They should then walk to their starting post or rostrum, calls the runners into line and raise their flag.

(s) When satisfied that a fair start can be achieved they should smartly lower their flag

Note: A start should ordinarily not be effected if the runners approach the start at anything other than a walk or a "jig-jog".

(t) If the Starter is not happy with how the riders have come in they may ask the riders to take a turn. If the Starter has told the riders to take a turn back, they must go back as far as the start, line up, and a standing start will be effected. The Starter may allow a rider or riders to take a voluntary turn if it assists in starting the race.

(u) Starters should be aware that where an approved starting gate is in use the procedures relating to the use of the flag must still also be adhered to.

Duties – After the Start

(v) The Starter can return to the weighing room to prepare for the next race.

Horses held at the Start

If the Starter gives permission for a horse to be held at the start, such horses must be led up behind all other runners or on the outside of the course well clear of all other runners, as the Starter may think fit.

Withdrawing horses

The Starter should ascertain in advance from the Clerk of the Course when, how and to whom they should communicate the fact that they have withdrawn a horse which has arrived at the start lame or for any reason cannot take part in the race. It is strongly recommended that such communication should be made via radio handset.

Communication of a withdrawn horse needs to be made in clear, simple tones as soon as the horse has been withdrawn. If a written message is to be sent, it should be simple e.g. No. 17 PATCHWORK – withdrawn.

If the Starter is not within earshot of the broadcasting system, they should allow a reasonable time for the announcement to be made before starting the race.

When a horse is fitted with a tongue strap the declarations sheet will inform the Starter if the horse should be withdrawn if the tongue strap cannot be fastened or is shed on the way to the start. It is the Starter's responsibility to take a final decision as to whether or not any horse should run in these circumstances, but in reaching the decision they will take note of any such notification.

The Starter Should

(i) Be firm and decisive in word and action.

(ii) Never appear to be in a hurry.

(iii) Not allow riders to pressure them into starting the race before they are satisfied. If the field 'breaks' before the Starter is satisfied, the Starter should keep their flag firmly up and recall them.

(iv) Give every horse a fair chance to get into line. If somebody is 'stuck' they should be given a chance to get going, perhaps with the help of the Assistant. On the other hand, riders who deliberately hang back cannot expect the Starter to hold things indefinitely for their benefit. Only the Starter can decide how much lee-way should be given in any particular case.

FENCE ATTENDANTS

8.6 (a) Organising Committees must ensure that Fence Attendants are fully conversant with their 'Duties and Authority' (See Appendix (8)E). It is suggested that these 'Duties' are laminated and pinned to the fences so that First Aid Personnel and Fence Attendants can make easy reference to them if necessary.

The Clerk of the Course shall be responsible for ensuring that all Fence Attendants have attended a briefing and a practical demonstration of by-passing procedures at a fence and have checked that they are fully aware of their duties before the start of racing (see Appendix (8) K 'Clerk of the Course Briefing Checklist).

(b) There must be two Fence Attendants at every fence on the course that is jumped more than once during the running of a race. Fence Attendants should ordinarily have no other duties during racing and it should be noted that First Aid Attendants do not constitute Fence Attendants. Fence Attendants should be issued with distinctive vests/ armbands which must be worn at all times during racing.

(c) Fence Attendants will ensure that at the fence assigned to them there is:

(i) Two Direction Markers indicating which side of the fence the horses are to be directed as shown (Appendix (8)G).

(i) One black and white chequered flag and a Fox 40 whistle to alert riders to a hazard ahead as shown (Appendix (8)G).

(ii) One white flag to alert a medical requirement to the fence

(iii) One orange flag to alert a veterinary requirement to the fence

IT IS RECOMMENDED THAT THE PURPOSE OF EACH FLAG SHOULD BE WRITTEN ON THE FLAGPOLE.

(d) The Fence Attendant will ensure that no unauthorised persons plant Direction Markers in fences when a horse or rider has fallen or a fence is not to be jumped. The responsibility for planting Direction Markers is to be that of the Fence Attendant who is responsible for that fence. The Direction Markers must be planted as soon as possible after there is an obstruction and the decision to by-pass the fence is made.

When the Direction Markers are not in use they must be stored away from the fence and with the legs pointing downwards. It is not acceptable to lean them against the fence or the wings.

(e) If a fence is unsafe to jump (e.g. injured horse/rider, broken fence/ wing etc.) and the decision to by-pass it is made, the Fence Attendants responsibilities are as follows:

(i) Plant the sets of Direction Markers in the top of the fence opposite the obstruction, to indicate to riders that the fence must not be jumped and in order that loose horses are directed away from the obstruction.

(ii) Use the black and white chequered warning flag and the Fox 40 whistle to alert riders to a hazard ahead. The Fence Attendant must not endanger themself and should position themself about 70 yds in front of and on the opposite side of the fence to that which the runners are directed (Appendix (8)G).

(iii) Once a fence has already been by-passed during the course of a race, the Direction Markers should remain in situ until the end of the race. This avoids any confusion/danger on the final circuit(s) in the event of the obstruction being cleared as the runners approach and leaving the Fence Attendant with a potentially split-second decision as to whether there is enough time to remove the Direction Markers.

Note: Unless it is absolutely safe to do so, Direction Markers should not be put in place whilst some horses have still to jump the fence on the same circuit.

JUDGE

8.7 The Organising Committee must ensure that the Judge has a Judge's Assistant. They should also be provided with a judge's box or wagon (see below) upon which to stand and a table near the Clerk of Scales.

The judge's box/wagon should be:

- At least 12m preferably 20m from the nearside finishing post.
- It should be elevated to a level from which more than one horse can be observed if close together.

Note: The further back from the finishing post the more height will be needed to achieve the same angle of viewing.

- Weather protection should be provided if at all possible, particularly for any electronic equipment
- A stable platform for setting up the video camera which must be set up on the prolongation of the winning line.

Note: The Judge must be looking along the same line so there must be enough depth to the platform.

Confirmation/clarification must be sought from the Area in advance of the Meeting that it is providing the video camera/video and what accessories are available to achieve the platform (e.g. tripod). If the Area equipment is not available, the course/Judge must find and utilise technology which can achieve at least 120 fps (equivalent of 12.5 cm forward movement per frame).

The Judge must have easy access to a laptop onto which clips of the finish can be sent for detailed checks in the event of a close race. The laptop should be provided to the Stewards if there is an objection to the result.

The Area must provide the Judge with full instruction on how to use the technology provided.

Duties:

(a) The Judge is responsible for placing the first four horses past the winning post and giving the distances between the 1st and 2nd and 2nd and 3rd horses. Occasionally, in a Hunt Members race for example, they may also be required to place the first farmer past the post.

In addition, on occasions where the Judge considers that there may be a disqualification(s) at the conclusion of a race (e.g. runners

appear to have taken different routes, or a rider's weight cloth has fallen off during the race) they should place such additional horses past the post as they see fit. This will enable the Stewards to officially promote e.g. the 5th 6th etc. horses in the event of a disqualification. The Judge is also responsible for recording the official race times on their return and should arrange for the time-keeper to be alongside them throughout the race.

(b) The suggested procedure in Appendix (8)H has been devised to minimise the risk of the Judge making a mistake. The procedure is based on the use of colours and their interpretation into numbers. In a similar way a commentator interprets colours into horses' names.

(c) The method used by BHA Judges is to list colours by numbers through the spectrum from white to black so that it is easy to look at the correct place in a list to identify a runner. Main body colours are used as far as possible as caps are liable to blow off and number cloths are often deceptive.

(d) An example of a Judge's Result Card is illustrated in Appendix (8)J.

(e) The Judge must ensure that a complete list of entries and colours has been sent to them by the Fixture Secretary and that a pad of Judge's Result Cards has also been provided not later than the day before the Meeting.

On the Day – Declarations

(f) When declarations have closed 1 hour before each race a duplicate copy of the Declarations Sheet must immediately be available to the Judge.

On the Day – Colour Changes

(g) The Clerk of the Scales must inform the Judge of any colour change noted as he weighs riders out.

On the Day – Results

(h) In the interests of the public, the Judge must get the result of a race announced by the Broadcaster as quickly as possible. It is therefore strongly recommended that the Judge is provided with a radio handset.

(i) In any case it is essential that the Judge's Result Card, duly signed, is passed to the Clerk of the Scales who signs it when weighing-in is complete and at the end of the day hands all result cards to the Fixture Secretary.

Use of the Photo-Finish Technology

The Judge will continue to use their naked eye, along with that of their Assistant, to judge the race. However, they must use technology to provide video evidence to confirm their decision and as an aid to estimate finishing distances.

Technology must not be used in place of a Judge's Assistant.

The camera/video must be set up exactly along the prolongation of the front edge of the finishing line with the necessary elevation to achieve visibility of more than one horse if close together. This will normally be done by the Area representative providing the equipment, but the Judge

should check that it is working, and that there are several spare batteries, before racing starts.

On completion of a race, if the result is close, the Judge and their Assistant should first check the video evidence to confirm their findings and ensure no identification mistakes have been made. If it remains unclear “the Judge is reviewing the finish” should be announced over the PA system.

Once both the Judge and Assistant are agreed that the result is clear, they may give that result but as no closer than a short head. If the camera indicates that the result is not clear, they must give the result as a dead heat. Note: Camera/Video footage is not the same as a photo finish.

If a mistake is found to have been made after weighed in has been announced, the Judge may change their decision, following consultation with the Stewards. If this occurs the bookmakers are not under any obligation to pay out a second time.

At the end of the Meeting the video clips should be sent to the PPA Office at info@p2pa.co.uk Clips will be held by the PPA and made available to the BHA, on request, if required for an enquiry or appeal.

STEWARDS

8.8 The Organising Committee must ensure that there are sufficient Stewards in attendance at every Meeting and that they are provided with proper facilities, so as they can properly carry out their stewarding duties in overseeing and upholding the Regulations.

Appointments

Every panel of Stewards should be constituted as follows:-

- The panel of Stewards should, wherever possible, be a minimum of six.
- The Chair of the Panel must be appointed before the day’s racing and indicated as such on the Racecard. The Chair should not be a member of the Organising Committee.
- As many Stewards as possible should have had recent experience of riding under the Rules of Racing or in Point-to-Points.
- As many Stewards as possible should have experience acting as a Steward on a licensed racecourse.
- It is recommended that the Chair of the Panel has recent experience of acting as a Steward on a licensed racecourse and to have attended a Point-to-Point Stewards Seminar within the last three years. If any one member of the panel has recent experience as a Steward on a licensed racecourse, he should normally be appointed Chair of the Panel.
- A Master should not be appointed a Steward at their own Meeting.
- If a Steward has an interest in a particular race (e.g. spouse, parent, son or daughter, authorised agent etc.), they should not act for that race and should not remain in the Stewards’ tent during the course of any enquiry resulting from that race.
- It is not advisable that close family members act on the same enquiry.
- Stewards are not permitted to ride in any races at a Meeting at which they are acting

- A Local Inspector cannot act as a Steward at one of their own courses,
- At International Meetings or Anglo-Irish Meetings up to two Stewards may be qualified Irish Stewards.
- All Stewards (with the exception of newcomers – of which there can be two per panel of six) are required to have attended a Point-to-Point Stewards Seminar within the last three years and to have officiated at least twice in any Season. Newcomers are expected to attend a Point-to-Point Stewards Seminar in their first year if they wish to continue to Stewards

Facilities

The following facilities must be available for the use of the Stewards at every Meeting:

- A stand or wagon for the exclusive use of the Stewards and other key Officials from which they can watch the race.
- A room or area in a tent in which Stewards can hold enquiries in private. Open-sided areas are not appropriate.

APPENDICES

APPENDIX (8)A	RIDERS' QUALIFICATION CERTIFICATE (RQC) DECLARATION
APPENDIX (8)B	DECLARATION TO RUN
APPENDIX (8)C	DECLARATIONS SHEET
APPENDIX (8)D	DOUBLE (OR MORE) DECLARATION OF RIDERS TABLE
APPENDIX (8)E	FENCE ATTENDANTS – DUTIES AND AUTHORITY
APPENDIX (8)F	FLAGS AND DIRECTION MARKERS FOR BY-PASSING
APPENDIX (8)G	BY-PASSING PROCEDURES
APPENDIX (8)H	JUDGING PROCEDURES
APPENDIX (8)I	DISTANCES
APPENDIX (8)J	JUDGE'S RESULT CARD
APPENDIX (8)K	CLERK OF THE COURSE BRIEFING CHECKLIST

APPENDIX (8)A

RIDERS' QUALIFICATION CERTIFICATE (RQC) DECLARATION

RIDERS QUALIFICATION CERTIFICATE DECLARATION

DATE:.....

MEETING: .....

RACE:.....

NAME OF HORSE
DECLARED TO RIDE: .....

Declaration

I certify that I hold a valid Riders Qualification Certificate issued by the Point-to-Point Authority having qualified with

the .....
Hunt in accordance with the requirements of the British Horseracing Authority Regulations for Point-to-Point Steeple-chases and that I have paid the required premium to the Point-to-Point Riders Insurance Scheme.

(NB. This declaration will be checked by The British Horseracing Authority. Should it transpire that you do NOT hold a current Riders' Qualification Certificate, you will be liable to a British Horseracing Authority enquiry, a fine and a lengthy suspension from race riding).

NAME ..... RIDER

SIGNED .....RIDER

APPENDIX (8)B

DECLARATION TO RUN

POINT TO POINT DECLARATIONS FORM 2026-27 SEASON

To be handed in to the Declarations team on arrival at the racecourse
no later than 60 minutes before the time of the race.

I declare the undermentioned horse is a runner in accordance with Regulation 111 of the BHA Regulations for Point-to-Point Steeple Chases and agree to be bound by said Regulations.

RACECOURSE/MEETING:..... RACE DATE:.....

RACE NO. (at entry)..... RACE NAME (including Div if done at entry) .....

HORSE NAME (INC. COUNTRY CODE).....Horse No.....

HEADGEAR TO BE WORN (mark applicable box 'x'):

BLINKERS	VISOR	CHEEKPIECES	EYE COVER	EYE SHIELD	HOOD	TONGUE STRAP	RED HOOD*
☐	☐	☐	☐	☐	☐	☐	☐

*RED HOODS must be removed at start

If the tongue strap cannot be fastened or is shed on the way to the start: Run ☐ Withdraw ☐

NAME OF DECLARER..... RIDER NAME:.....

HORSE PENALTY ..... WEIGHT TO BE RIDDEN AT .....

RIDER ALLOWANCE /PENALTY..... (To be declared on the day)

CHANGES IN COLOURS SINCE ENTRY:

BODY, SLEEVES & CAP (State 'SAME' or new colours).....

.....

IN CASE OF DIVISIONS AND UNABLE TO GET CHOICE OF JOCKEY

PLEASE STATE WHETHER HORSE WILL BE WITHDRAWN OR ALTERNATIVE RIDER.....

DECLARATION:
I CAN CONFIRM THAT I WISH TO DECLARE THE ABOVE HORSE AS STATED AND THAT I AM AUTHORISED TO DO SO

Signed: (Owner or Authorised Keeper - electronic signature accepted).....

PRINT NAME .....PHONE NO. (in case of query) .....

To be completed by the person making the declaration & returned to them signed by the Declarations Clerk

Name and Number of Race .....

Horse's Name and Number .....

Signed (by Declarations Clerk) .....

APPENDIX (8)C

DECLARATIONS SHEET

TIME OF RACE:

Number of Runner.	Placing by Judge.	Rider's Name.	Weight.	Extras carried Blinkers, Tongue Strap etc.	Owners Preference if horse unable to start with declared tongue strap (Run/Be Withdrawn)	Extras for Number Boards of weights carried, Col. Changes etc.

RESULTS: 1st ..... 2nd ..... 3rd ..... Winning Time ..... Distance .....

APPENDIX (8)D

DOUBLE (OR MORE) DECLARATION OF RIDERS TABLE

Once completed the Declarations Clerk should complete the Declaration Sheet (Appendix (8)C) and distribute accordingly.

Race:
Time of Race:

Column 1

No. of Horse Rider Declared for; Possible Alternate Rider; Option to Withdraw if Race is NOT split

No. of Runner	Declared Rider	Rider's 1st Preference	Rider's 2nd Preference	Alternate Rider if Race Divided	Withdrawal of Horse if Race not Split?	Rider's 3rd Preference	Alternate Rider if Race Divided	Withdrawal of Horse if Race not Split?

Column 2

Finalised Declared Rider (after Decs Closed)	Division

KEY:
COLUMN 1: THE RIDERS WHEN THE RACE IS DIVIDED.
COLUMN 2: THE RIDERS WHEN THE RACE IS NOT DIVIDED

APPENDIX (8)E

FENCE ATTENDANTS – DUTIES AND AUTHORITY

EQUIPMENT

FLAGS:

1.	**DOCTOR/AMBULANCE**	**White**
2.	**VET**	**Orange**
3.	**HAZARD WARNING (to RIDERS)**	**Black & White Chequered**

FOX 40 WHISTLE

DIRECTION MARKER X **3** BLACK BOARD WITH DISTINCTIVE FLUORESCENT YELLOW **ARROW**

DISTINCTIVE VEST/ARMBAND – TO IDENTIFY THE FENCE ATTENDANTS

DEALING WITH FALLEN HORSES/RIDERS

1. If the fence is obstructed by a fallen horse or rider or deemed unsafe to jump (e.g. Broken Guard Rail) during the race, IMMEDIATELY place the DIRECTION MARKERS in the top of the fence opposite the centre of the hazard. These DIRECTION MARKERS signal to the riders that they must not jump the fence. The yellow **arrows** on the marker must be pointing towards the side of the fence the field is to pass. Ensure that there are no obstructions, members of the public or vehicles, on the part of the course beside the fence where the horses and riders are to pass.

2. If a DOCTOR/AMBULANCE or VET is required wave the appropriate flag.

3. Use the BLACK AND WHITE CHEQUERED FLAG and Fox 40 Whistle to signal to the riders as they approach the fence, that there is a hazard ahead. Wave the flag in a figure of eight motion and blow the whistle. Stand on the opposite side of the fence to that which the runners are going to pass and wave the flag above your head. You should position yourself around 70yds before the fence, however must have regard for course topography and crowd congregation in ensuring that you are seen by all riders, whilst also not putting yourselves or participants in danger.

4. Once a fence has already been by-passed during the course of a race, the Direction Markers should remain in situ until the end of the race.

   Note: It is NOT recommended that these procedures are implemented whilst some horses have still to jump the fence on the same circuit of the course, unless it is absolutely safe to do so.

   When the Direction Markers are not in use they must be stored away from the fence and with the legs pointing downwards. They must not be leant against the fence or the wings.

NOTICE TO BE DISPLAYED IN WEIGHING ROOM

ISSUED BY THE BRITISH HORSERACING AUTHORITY

SAFETY AT FENCES

THE FENCE ATTENDANTS, IDENTIFIED BY THEIR DISTINCTIVE VESTS/ARM BANDS , HAVE THE AUTHORITY OF THE STEWARDS OF THE MEETING AND ARE FULLY BRIEFED ON THE PROCEDURES AND ARRANGEMENTS FOR DEALING WITH ALL INCIDENTS AT FENCES.

THE PUBLIC MUST KEEP OFF THE COURSE AT ALL TIMES AND MUST NOT INTERFERE IN ANY WAY WITH ANY RACE OR THE ACTIVITIES OF THE FENCE ATTENDANTS OR THE EMERGENCY SERVICES, DOCTORS, AMBULANCES, VETERINARY SURGEONS.

ALL PARTICIPANTS AND THE PUBLIC MUST OBEY ANY INSTRUCTIONS GIVEN TO THEM BY A FENCE ATTENDANT

APPENDIX (8)F

DIRECTION MARKER AND FLAG FOR BY-PASSING

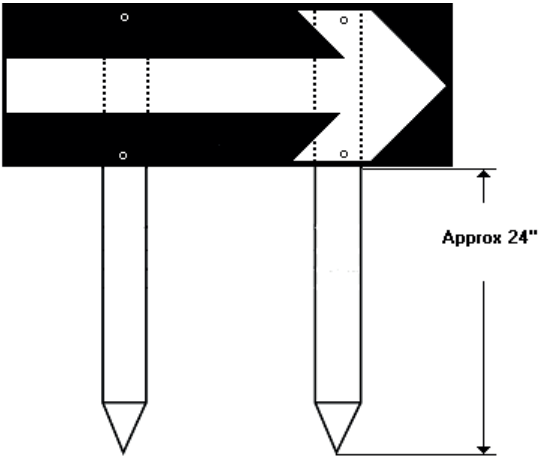

DIRECTION MARKER

Three Direction Marker are required at every fence, made of thick board or composite material with any sharp edges rounded off. Each marker must be a minimum 4ft (width) x 1ft (height) with a fluorescent yellow arrow on a black background.

Each marker must have 2 wooden legs/uprights with approximately 24 inches of leg below the bottom of the direction marker, to allow the marker to be fixed in a fence.

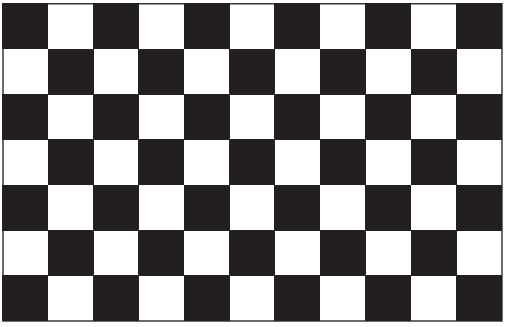

BLACK AND WHITE CHEQUERED FLAG

APPENDIX (8)G

BY-PASSING PROCEDURES

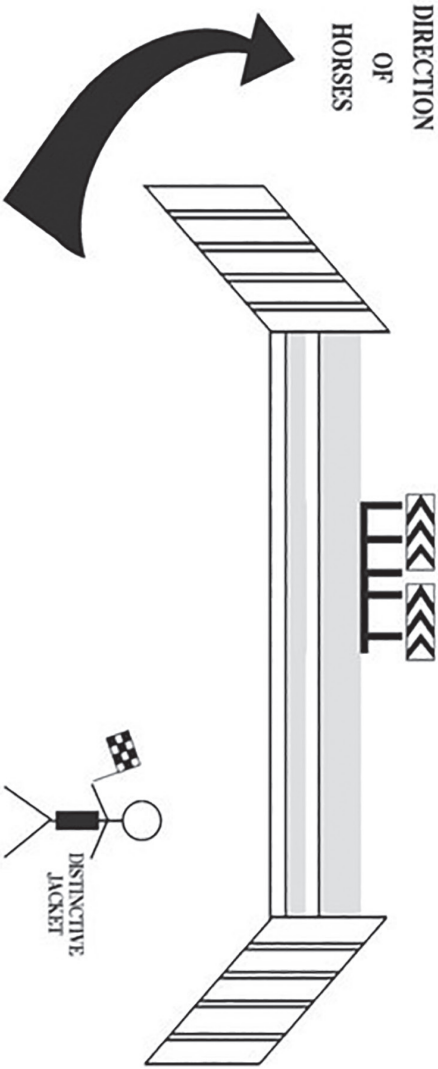

The fence attendant should be approx 70 yards in front of the fence & behind the rail (if possible)

APPENDIX (8)H

JUDGING PROCEDURE

Note: If the Judge considers that they have time to sort out runners and colours in the time available before each race, ignore paras. b & c.

Before the Meeting

(a) Obtain a suitable hard-back book.

(b) If supplied with entries before the Meeting it is recommended that a list of colours through the spectrum is made by using the associated number, starting with white and ending with black, of ALL ENTRIES. Taking a piece of scrap paper, down the left-hand side list the predominant colours (e.g. White, Pink, Yellow, Orange, Red .....Navy, Black etc.)

Refine the list (e.g. Gold, Light Green, Dark Green, Emerald) in the appropriate order. Use abbreviations if preferred (e.g. 'Grass' for light green 'Bottle' for dark green). Anything goes as long as it reminds the Judge of the colour. Run through the entire list entering the number on the card against the nearest colour for each race.

Colours	**Racecard Number**
SKY BLUE	17-31 – 35
PINK	27
YELLOW	20 – 41
ORANGE	15
RED	19 – 22 – 23

At the Meeting

(c) As soon as declarations are available take them. Ring the declared runners on your list.

(d) With reference to the Racecard and any changes notified by the Clerk of the Scales enter the numbers of the declared runners in your book starting from the top (with white through to black) and against them write the colour, mark, nickname or owner's name by which you can easily remember and identify them.

e.g. 17 SKY BLUE /(to indicate sash)

35 SKY BLUE (body)

27 PINK 1/2 (to indicate pink halved with another colour)

41 YELLOW GREY HORSE

22 RED = (to indicate hoop)

(e) Go into the Parade Ring and recognise these colours nicknames etc. making adjustments as necessary. If the Judge sees a grey horse make a note of it.

At the Start and during the Race

(f) Read the race and delete fallers.

(g) At the distance decide on the colours you will be concerned with at the finish.

(h) Judge the 1st, 2nd, 3rd and 4th past the post with the official distances and note them in your book

<u>To be read and applied in conjunction with Instruction 8 section 8.7 'Judge'</u>

APPENDIX (8)I

DISTANCES

Note: There is no finishing distance of **'a Nose'**.

Deadheat	Five lengths
Shorthead	Six lengths
Head	Seven lengths
Neck	Eight lengths
Half a length	Ten lengths
Three quarters of a length	Eleven lengths
One length	Twelve lengths
One and a quarter lengths	Thirteen lengths
One and a half lengths	Fourteen lengths
One and three quarter lengths	Fifteen lengths
Two lengths	Twenty lengths
Two and a half lengths	Twenty five lengths
Three lengths	Thirty lengths
Three and a half lengths	Distance
Four lengths	Same

APPENDIX (8)J

JUDGE'S RESULT CARD

Judge's Result

Card

..... Hunt Point-to-Point Races

..... (DATE)

..... RACE

1st .....

2nd .....

3rd .....

4th .....

WON BY ..... In the time of.....

Distance between 2nd and 3rd .....

Signed .....Judge

WEIGHED IN:

Signed ..... Clerk of the Scales

APPENDIX (8)K

CLERK OF THE COURSE BRIEFING CHECKLIST

Before racing commences the Clerk of the Course must carry out a briefing of everyone working on the racetrack. It should be conducted approximately one hour before racing commences.

The following persons must **be present:**

- Clerk of the Course
- Incident Controller (IC)
- (S)PVS and wider vet team to include ambulance and recovery drivers
- Course Repair Team
- Fence Attendants
- Local Inspector and BHA Inspector (if present)

If timings allow, the following person should also be present:

- **(S)RMO and paramedic team**

The following must **be covered:**

- Duties of a Fence Attendant
- Incident Control
- Incident management involving injured jockey (SRMO)
- Incident management involving injured horse (SPVS)
- Incident management involving horse and jockey to include 'trapped jockey' scenario (SRMO and SPVS)
- Stop Race Procedure
- Vehicle positioning
- Screen availability and positioning
- Water availability

DUTIES OF A FENCE ATTENDANT

- Wear distinctive vest/armband
- Check you have right equipment: flags, whistle, fence paddle, screen if allocated
- Be aware of your personal safety at all times particularly around a recumbent horse
- Repair and maintain fence and ground around it
- Ensure Bypass areas are always kept clear (e.g. vehicles attending an incident)
- Be aware of the time taken to do a circuit and thus the available time to make a decision
- If a fence (or course within the vicinity) is broken or obstructed ensure:
    1. Direction markers placed in fence (pointing the correct way) placed directly opposite the jockey/horse to deter loose horses from jumping.
    2. Appropriate flag deployed i.e. vet/doctor/warning
    3. Radio information as appropriate
    4. If a fence or obstruction is to be bypassed then the chequered flag should be deployed on the approach at a distance of about 70 yards
    5. The attendant should stand on the opposite side of the fence/incident to the intended direction of bypass
    6. The flag must be held above the head and waved in such a way as

to get the attention of the jockeys. A whistle must be blown in long sharp busts

7. Once bypass arrows are erected they should remain in place for the duration of the race
8. Radio users should be aware that their comments may be overheard by members of the public so remain discreet at all times.
9. Listen to the directions provided by the IC, (S)RMO and (S)PVS at major incidents involving injured jockeys and/or horses.
10. If available assist with screen erection and holding. Screen erection must be rapid particularly in public areas. Be sure to follow any directions provided by the IC, (S)RMO or (S)PVS as to position of screens and distance from the injured party. Be sure to remain aware of what is happening behind the screens and communicate with other screen holders.

INCIDENT CONTROLLER (IC)

One person (usually a member of the Rapid Response Team) must be designated at the start of the meeting to take charge of control at a major incident involving injured jockeys and/or horses. The person is referred to as the Incident Controller (IC) and should be clearly identifiable and known to the racecourse team. Their role is to arrive promptly and to take charge at an incident and to ensure the safety of all those involved. They will ensure that screens are erected correctly where appropriate and liaise with the (S)RMO and (S)PVS in cases involving injured jockeys/horses to establish the situation and to make decisions regarding the management of the incident and the race itself. If not the Clerk of the Course, they will liaise with them to ensure they are fully informed and that appropriate decisions are made regarding the management of the race. They will also ensure that connections and bystanders do not enter the Danger Zone and interfere with the activities of the (S)RMO and (S)PVS.

SRMO (if in attendance): INCIDENT MANAGEMENT – INJURED JOCKEY

The SRMO will make it very clear at the briefing what is expected of everyone in the event of a jockey being injured. Invariably the job of the fence attendant/IC is to make the area safe and allow the (S)RMO to conduct their duties in a safe and private environment.

SPVS: INCIDENT MANAGEMENT – INJURED HORSE

As for the SRMO but in this scenario there is the added risk of persons being injured by the patient and the SPVS will describe and demonstrate the ‘Danger Zone’ around a recumbent horse and why it is important that no one enters that zone. Fence attendants and others should be made aware by clear instruction if a recumbent horse is about to be rolled or is likely to get up suddenly in order to ensure everyone’s personal safety. The IC should liaise with the (S)PVS to transfer relevant information to those holding screens.

SRMO (if in attendance) AND SPVS: INCIDENT MANAGEMENT – INJURED JOCKEY AND HORSE

The SRMO and SPVS will describe what the process will be if a jockey is down and in the Danger Zone or worse that the jockey is ‘trapped’ by a recumbent horse. In such scenarios the (S)RMO and (S)PVS will quickly liaise and determine the appropriate course of action. It is again the role of the IC to ensure that both are working in a safe and private environment.

STOP RACE PROCEDURE

A yellow and orange flag will be deployed in the event that a STOP RACE scenario needs to be implemented. Such flags are only held by those authorised to do so and the Clerk of the Course and/or IC will have control of such a decision and will have suitably briefed those who are responsible for implementing the procedure.

SCREENS

Everyone working as part of the racecourse team should be made aware of the position and availability of screens and how they should be erected to ensure the safety and privacy of those involved in dealing with incidents. On windy days it must be expected that further help may be required to hold screens and this must be prioritised as necessary once a race is over. Fence attendants should be made aware to position screens at least 2-3 meters away from a recumbent horse and follow the directions of the IC and (S)PVS as to any adjustments that need to be made.

It is important that screens are rapidly erected particularly in public areas but there will be occasions when the (S)RMO or (S)PVS instruct they are happy that the incident does not require screening.

WATER AVAILABILITY

Large quantities of water and buckets must be available at the unsaddling area, winners enclosure, paddock, lorry park and between the pull up and unsaddling enclosure (at a site agreed with the SPVS). Also if possible between last two fences. Mobile water must always be available. All personnel should be aware of the positioning of water supplies and assist in ensuring that it is available to the veterinary team as required particularly on hot days and in the case of injured horses on the racecourse.

9. VETERINARY ARRANGEMENTS

DUTIES OF THE ORGANISING COMMITTEE

9.1 All veterinary arrangements at a Point-to-Point Meeting must be in accordance with this Instruction. Unless prior permission has been obtained from the BHA in advance no Meeting should commence or continue without the required veterinary arrangements being in place.

PROVISION OF SERVICES

9.2 Pre-Raceday

(i) Three Veterinary Surgeons (S)PVSs MUST be appointed; one of whom must be appointed to act as the Senior Point-to-Point Veterinary Surgeon (SPVS) and to take charge of all the veterinary arrangements. The SPVS must be appointed and their name passed on to the PPA Office at least **six (6)** weeks (preferably three months) prior to the Meeting.

Unless already accredited as an approved Senior Racecourse Veterinary Surgeon (SRVS), any Veterinary Surgeon acting as Senior at a point-to-point must have completed the BHA (Racing to Learn) online Senior Point-to-Point Veterinary Surgeon (SPVS) training. Organisers are responsible for checking that the SPVS they appoint has carried out the necessary training and is accredited as either an SRVS or SPVS before submitting their details to the PPA.

Note: Three (S)PVSs **must be in attendance at all meetings**. Whilst it is sensible for the third (S)PVS to be fully trauma trained, this is not mandatory unless required at a specific course in the opinion of the SPVS.

(ii) (S)PVSs must:

- Be members of the Royal College of Veterinary Surgeons with current, valid professional indemnity insurance;
- Have a clinical involvement which includes a significant amount of regular treatment of horses.
- Have been qualified for at least five years with a broad experience of equine practice;
- (A minimum of two) Have attended an approved ARVS Casualty Management Seminar (CMS) within the last 5 years.
- Be physically and mentally capable of carrying out all the duties required of a (S)PVS on a Point-to-Point course.

Information regarding Casualty Management Seminars (CMS) are available on the Association of Racecourse Veterinary Surgeons Website (www.arvs.org.uk). The BHA Equine Science and Welfare Department can be contacted on 0207 152 0090.

(iii) The SPVS is to ensure a minimum level of equipment is available to deal with casualties, which should include:

- Adequate materials for Robert Jones dressings
- Gutter and/or commercial splints
- Materials for chemical euthanasia
- Intravenous fluids
- Newmarket Compression Boot (if available in the region)

Raceday

(iv) Before racing commences the following must be present and procedures in place to check their attendance:

- Three (3) (S)PVSs, each provided with a radio handset.
- A recovery vehicle with screens and specified experienced driver, who should remain in the vehicle throughout racing. The recovery vehicle must have high sides with either a fixed or temporary roof, working winch and a tarpaulin.
- A separate 4x4 towing vehicle suitable for the ground conditions.
- A horse ambulance with screens, water and experienced driver, who should remain in the vehicle throughout racing. The vehicle must have a front ramp to allow the horse to be unloaded in a forward direction. A separate vehicle and driver must be provided for the recovery vehicle and the horse ambulance.
- A Rapid Response Vehicle with screens and water

Clerks of the Course have been advised that they must provide abundant supplies of cool fresh water and buckets adjacent to the Parade Ring, unsaddling enclosures, between the pull up and unsaddling enclosure (at a site agreed with the SPVS), and at the horse box park. Ideally water should also be available at the last two fences. Static supplies may take the form of ICBs or water butts. Water should also be carried on the horse ambulance and on the Rapid Response Vehicle.

Screens should ideally be provided at the last two fences, on the Rapid Response vehicle, horse ambulance and recovery vehicle, and at the unsaddling enclosure and Parade Ring;

(v) Fence Attendants must have the required orange flag which should be used to summon veterinary assistance.

(vi) It is recommended that the Clerk of the Course, in conjunction with the (S)PVS, ensures that the course allows suitable vehicles (four wheel drive) for veterinary staff to have access throughout, or provide suitable locations to give veterinary coverage for the whole course.

(vii) Prior to racing all (S)PVS in attendance must attend the Clerk of the Course briefing of the staff working on the racecourse.

(viii) Two (S)PVSs must be on the racetrack for each race one, of whom should be at the start. Veterinary arrangements should be such that it is possible to deal efficiently with two separate incidents in the same race.

(ix) The (S)PVSs, horse ambulance, recovery vehicles and Rapid Response Vehicle must be deployed to ensure an immediate response to equine casualties. The SPVS should be aware of where the nearest veterinary referral centre is in relation to the Meeting.

(x) (S)PVSs must alert the Stewards if;

- they consider that a rider has failed to pull up, or delayed pulling up, a horse that in their opinion was very tired or lame;
- they notice after the race that the use of the whip has produced a weal or drawn blood, or that the horse has been marked in the wrong place.

(xi) A (S)PVS must be available in the Parade Ring prior to each race.

(xii) The SPVS must not leave the course until all horses in the last race have been accounted for, and the permission of the Clerk of the Course for withdrawal of veterinary services has been obtained.

(xiii) (S)PVSs should wear a distinctive jacket/armband during racing.

(xiv) Calls for veterinary assistance should not be made over the open PA system. VSs should be issued with radios with which they can communicate with each other and with the Clerk of the Course.

(xv) A (S)PVS must complete a VO19 and provide to connections on any occasion that a horse receives medical treatment. The (S)PVS must contact the home vet or referral centre in the case of serious and/or long-term injuries that are likely to require ongoing care.

(xvi) At the end of the Meeting the SPVS must complete the online 'Fixture Veterinary Report', using the link provided by the BHA and available within Appendix (9)A 'Senior Point-to-Point Veterinary Surgeon (SPVS) Responsibilities'.

DESTRUCTION OF HORSES

9.3 At least two suitable screens should be used behind which it will be possible for a (S)PVS to destroy an injured horse out of sight of the public. At least one screen should be carried as part of the equipment of the recovery vehicle and one on the Rapid Response Vehicle.

Screens should be kept up until the horse is loaded into the recovery vehicle and covered, but it should be made clear that absence of the screen must in no case hold up the humane despatch of an injured horse. Service/recovery vehicles can be parked in such a way as to maximise the screening of horses. The method of euthanasia must be left to the attending (S)PVS taking into account the welfare of the horse and the safety of assistants and/or onlookers e.g. in the home straight. If a fire arm is to be used it must be with a sound moderated weapon and not used in any area close to the public.

DISPOSAL

9.4 The Organising Committee must have a designated area for the placement of dead horses during the day, which is both secure and out of public view. All dead horses must be covered so that aerial photos cannot be taken. The recovery vehicle should not keep dead horses on board following an incident or try to drag a second horse onto the first at the site of the incident. No race should be started until the recovery vehicle is empty and back in position.

Organisers must have a policy regarding 'elective euthanasia' to avoid unnecessary debate and ill feeling. (S)PVS should be made aware of this policy.

It is strongly recommended that Organising Committees cover all veterinary costs involved when on-course humane euthanasia occurs.

APPENDICES

APPENDIX (9)A SENIOR POINT-TO-POINT VETERINARY SURGEON (SPVS) RESPONSIBILITIES

APPENDIX (9)A

SENIOR POINT-TO-POINT VETERINARY SURGEON (SPVS) RESPONSIBILITIES

Personal

1. The Senior Point-to-Point Veterinary Surgeon (SPVS):

    a. must hold current ARVS CMS accreditation

    b. is expected to have racecourse experience or extensive Point-to-Point experience. In addition, it is now a requirement that they hold current SRVS status or have completed SPVS online training within the last 3 years.

    c. must be appointed at least **six (6)** weeks (preferably three months) in advance of the fixture date

    d. must be fully conversant with the relevant Point -to-Point Instructions and have read and understood the section 'Senior Point-To-Point Veterinary Surgeon (SPVS) Responsibilities' contained within the Instructions

    e. must have access to the contact details for the:
        i. Clerk of the Course
        ii. Horse Ambulance Provider
        iii. Recovery Vehicle Driver
        iv. Senior Medical Officer (SRMO)

Pre-Fixture

2. **Vet Team:** The SPVS must ensure that the veterinary team for the fixture is suitably qualified and equipped as per the Instructions. A team of 3 veterinary surgeons must be in attendance at all fixtures. A race must not commence if only one (S)PVS is available to attend casualties on the racetrack.

3. **Horse Ambulance and Recovery Wagon:** In advance of the fixture the SPVS should contact the horse ambulance provider and recovery vehicle driver to ensure that the vehicles are fit for purpose and meet the requirements of the Instructions. It should also be ascertained that the designated drivers have relevant horse handling experience.

4. **Clerk of Course:** The SPVS must contact the Clerk of the Course in advance to discuss the following:

    a. Time of Briefing
    b. Screen availability and deployment
    c. Water availability
    d. Rapid Response Vehicle (Incident Controller plus others)
    e. Hot Weather Protocol (if considered relevant by SPVS)
    f. Driver and vehicle provision if necessary
    g. Stop Race Protocol

5. **SRMO:** SPVS must contact the SRMO in advance of the meeting to discuss the briefing of medical staff with respect to the Recumbent Horse, Danger Zones and Trapped Jockey scenario. This may be conducted at the Clerk of the Course briefing but alternatively it can be organised as a separate briefing between the Medical and Veterinary staff.

Before Racing on the Day

6. **Timing:** The SPVS must attend the Clerk of the Course briefing. They should ensure the veterinary team arrive at least 1 hour in advance of the first race and that all attend the Clerk of the Course briefing. The SPVS will participate in the briefing, offering clear instruction to volunteers and others as to ensuring their own personal safety around injured and/or recumbent horses. This will include a demonstration of the 'Danger Zone' around recumbent horses. They will highlight the importance of screening and screen positioning while staying safe.

7. **Pre-Race Checks:** The SPVS should check that all the necessary veterinary services are in place and compliant with the Instructions. Screens must be available at the last two fences, in the Paddock, unsaddling area and where horses enter and leave the course. They should also be available on the Rapid Response Vehicle, horse ambulance and Recovery Vehicle. The SPVS should also ensure that water is available at sites as per the Instructions.

8. **Communications:** The SPVS should ensure that all team members have a radio and ideally are on a dedicated channel to allow effective, uninterrupted communication. All team members should be made aware of the relevant channels required to contact the Clerk of the Course and the Senior Steward should that be necessary.

   A radio check of all team members should be conducted well in advance of the first race. The SPVS should ensure that the Clerk of the Course and the Senior Steward are both contactable.

9. **Deployment:** The SPVS must brief the veterinary team on the course layout, access points, bypass directions and the Stop Race Protocol. One (S)PVS must attend the Start of each race. The team should be deployed in such a way as to ensure prompt attendance to all casualties within one minute. Plans for redeployment should be discussed should a team member be required to attend a casualty.

Senior Steward (Chair)

10. The SPVS should make contact with the Senior Steward and confirm that all the Veterinary services are in place and compliant with the Instructions. If a Hot Weather Protocol is in place the Senior Steward should be made aware and a request made to brief all jockeys that they should dismount post-race at the request of a (S)PVS to ensure that horses can be cooled as required.

11. The Senior Steward should be contacted by the SPVS in the event that anyone behaves inappropriately towards a member of the veterinary team or refuses to act as directed by a (S)PVS on matters of horse welfare.

12. The SPVS (or any (S)PVS with relevant experience) should be available to the Stewards as required to offer an opinion on matters of riding extremely tired or injured horses, evidence of excessive use of the whip or any other matters related to horse welfare.

Equine Injury

13. The SPVS should ensure that all members of the veterinary team are adequately supported as soon as possible in the event of a serious casualty. If a second opinion is required, this should invariably fall to the SPVS. It is recommended that connections are fully briefed by the SPVS regarding diagnosis, prognosis and ongoing treatment. (Where possible all cases of humane destruction should receive a second opinion from another (S)PVS but not at the risk of compromising horse welfare.)

14. The SPVS must always be involved in decision making regarding 'fitness to travel'.

15. If connections are resistant to veterinary assistance and display a disregard for a horse's welfare it is strongly recommended that the SPVS reminds them of their responsibilities. In extreme cases the SPVS may decide to report the matter to the Senior Steward.

16. In the event of a fatality, the SPVS must ensure that the Point-to-Point Secretary is aware of the horse's name and the Owner/Keeper's details. It is strongly recommended that the costs of humane euthanasia are covered by the Organisers.

17. Costs related to elective euthanasia are best explained to connections by the SPVS.

18. Treatment forms (VO19 available on the PPA website) must be provided to the connections of all horses receiving medical care.

19. The SPVS must ensure that prompt contact is made with the home veterinary surgeon in situations where a horse has sustained a serious and/or long-term injury in order to establish continuity of care. A copy of the VO19 should also be sent to the home veterinary surgeon without delay.

20. In cases where it is agreed to send a casualty to a referral hospital the SPVS should ensure that the Owner/Keeper has appropriate directions, and that contact has been made with the referral centre in advance to discuss the casualty. A copy of the VO19 should be sent to the referral centre in advance.

21. The SPVS should make a follow up phone call in the case of horses which sustain serious and/or long-term injuries and return home or are sent to a referral centre. If a horse is subsequently euthanased having been reassessed after leaving the course, it would be appreciated if this information could be included in the Fixture Veterinary Report Form.

Post Fixture Debriefing

22. At the end of the meeting, it is recommended that the SPVS conducts a short debrief with all members of the veterinary team to ensure that all significant injuries have been recorded, that all major incidents at the meeting are reviewed and critiqued and to discuss whether any changes need to be made to the provision of veterinary services in the future.

Feedback to the Clerk of the Course is always appreciated and ensures that changes are made at future meetings to ensure ongoing improvements in the provision of efficient veterinary services.

Fixture Veterinary Report Form

23. The BHA requires that the SPVS completes the online Fixture Veterinary Report and returns it within a few days of the meeting. The report is in digital form and can be found here: https://www.cognitoforms.com/BritishHorseracingAuthority/pointtopointinjuryreportform

10. MEDICAL ARRANGEMENTS

DUTIES OF THE POINT-TO-POINT ORGANISING COMMITTEE

10.1 All Medical Arrangements at a Point-to-Point Meeting must be in accordance with Appendix (10)A (to these Instructions). Unless prior permission has been obtained from the BHA Chief Medical Adviser (CMA), no Meeting should commence or continue without the required Medical Arrangements being in place.

APPOINTMENT OF SENIOR RACECOURSE MEDICAL OFFICER

10.2 PRIOR TO THE START OF THE SEASON, WITH CONFIRMATION NO LATER THAN **SIX (6) WEEKS** PRIOR TO THE POINT-TO-POINT, THE FIXTURE SECRETARY WILL APPOINT A SENIOR RACECOURSE MEDICAL OFFICER (SRMO) to take charge of the medical arrangements at that Point-to-Point course. The BHA Medical Department should be provided with the name and contact details of the SRMO.

On their appointment the SRMO is to be provided with the Medical Briefing Pack that is sent to all Fixture Secretaries by the BHA Medical Department before each Season.

ROLE OF THE SENIOR RACECOURSE MEDICAL OFFICER

10.3 **Pre-Raceday**

The SRMO in conjunction with the fixture secretary must:

(i) carry out a risk assessment (with particular reference to the minimum number of doctors, paramedic ambulances and the number of first aid attendants required)

(ii) prepare Standing Orders (with particular reference to BHAGI 11.1 (under the Rules of Racing), Appendix (10)A (of these Instructions) and the Guide to Safety at Sports Grounds – Chapter 18 – 2008)

(iii) prepare a Major Incident Emergency Plan.

(iv) submit all documentation via this Link at least **6 weeks*** before the first raceday of the Season

***A charge of £500 may be imposed upon any Meeting not submitting the required medical documentation by the 6-week deadline. No Meeting will be allowed to take place whose documentation has not been approved by the BHA CMA by the date for entries for the Meeting.**

Raceday

The SRMO (or their appointed deputy for the day) must ensure that arrangements are complaint with Appendix (10)A and the venues' Standing Orders and that

:

(v) all medical personnel sign Medical Report Form B to indicate their attendance.

(vi) a (S)RMO is available at a pre-arranged location within the medical tent or close to the weighing room (preferably signposted and near the scales) after races to check riders who had a fall and to authorise the release of Medical Record Books belonging to riders who have finished riding at the fixture and wish to leave the course (S)RMO must report to the Stewards any rider who does not present themselves when required. **All riders given a Red or Amber entry should be notified immediately by text or WhatsApp message to the CMA 07788 567440.**

Note: Fixture Organisers are asked to nominate an individual (Medical Runner) to record the details of all fallers and unseated riders in every race and to relay this information to the (S)RMO. This will assist the (S)RMO so that they are fully aware of which riders need to present themselves for medical inspection.

(vii) Both completed Medical Report Forms (A and B) are returned to the CMA WITHIN 24 HOURS. The forms can be scanned and emailed to the BHA Medical Department on: medical@britishhorseracing.com or sent by WhatsApp or other secure messaging system to the CMA. A hard copy will not be required providing confirmation of the receipt of the electronic version is received. Completed forms contain confidential information and should therefore be treated in a GDPR appropriate fashion. The forms are available for download from the 'Downloads' area on the Point-to-Point National Website www.pointtopoint.co.uk and will have additionally been sent to the Fixture Secretary eight weeks prior to the fixture.

MEDICAL RECORD BOOK (MRB)

10.4 The Declarations Clerk must obtain every rider's MRB upon their arrival at the racecourse and pass them to the Clerk of the Scales for each MRB to be checked by the (S)RMO.

If a rider attends without an MRB they are not permitted to ride unless the SRMO has prior approval from the CMA or their deputy

MRB's are to be left with the Declarations Clerk until the rider has finished riding for the day and the (S)RMO has confirmed that no Medical Entry is required.

<u>Declaring a Rider as fit to ride</u>

(S)RMO are to examine all riders who have:

- An amber entry in their MRB or
- A red entry in their MRB accompanied by a letter/email from the BHA indicating that they are now on amber entry or
- An amber entry on the EMR (even if nothing in the MRB) or
- An amber entry on the Injury List (even if nothing in the MRB)

When a (S)RMO has made their decision as to whether such a rider is fit to ride they must record this information in the "RECORDABLE ACCIDENTS" section of the rider's MRB.

If a rider has a CMA red injury, please call the CMA immediately on 07788 567440. Do not clear the rider unless approval has been received from the CMA or their deputy.

Assess fallen riders in sufficient detail to make a clinical judgement as to whether they are fit to continue riding or to be stood down for the rest of the day. If they are stood down, they must be given a 'RED or AMBER entry' on their EMR notes and where relevant in their MRB and on Point-to-Point Medical Report Form A. Fallen riders are not permitted to ride again until reassessed by a (S)RMO, if a non- significant injury/illness (AMBER entry); or by the CMA (RED entry) and then an (S)RMO, if a more significant injury (RED entry). Other than for simple suturing or assessment of possible concussion, an AMBER entry may not be removed on the day it is applied. Any rider who is evacuated to hospital or is recommended to attend hospital e.g. for X-rays, or is concussed should be given a RED entry.

RACEDAY CONFIRMATION THAT MEDICAL ARRANGEMENTS MEET REQUIREMENTS

10.5 At every Meeting, 30 minutes before racing commences, the Stewards must have confirmed to them that all Medical Arrangements are compliant. The form to this effect is also required to be completed before racing, signed by the Organising Committee and the SRMO, and must be emailed to the BHA Medical Department (medical@britishhorseracing.com) within 48 hours of the end of the Meeting.

BHA POINT OF CONTACT

10.6 Any problems or items requiring clarification by the Clerk of the Course or SRMO should be referred to:

Chief Medical Adviser
BHA Medical Department
Holborn Gate
26 Southampton Buildings
London
WC2A 1AN

Tel: 020 7152 0111
Mobile: 07788 567440
E-mail: medical@britishhorseracing.com

APPENDICES

APPENDIX (10)A	MEDICAL ARRANGEMENTS
APPENDIX (10)B	CONCUSSION PROTOCOLS

APPENDIX (10)A

Duties of the Managing Executive/Point-to-Point Organising Committee

1. Managing Executives/Point-to-Point Organising Committees are responsible for ensuring that:

   (a) Licensed Racecourse/Point-to-Point Course maintains compliance with BHAGI 11 (replicated in this Appendix (10)A)

   (b) any deviation from the BHA General Instruction will only be permitted following discussion with the SRMO and the CMA and with written dispensation from the BHA to be included in the SO

   (c) where the Annual Risk Assessment (ARA) indicates that higher levels of staffing, ambulances or facilities are required than those set out as minimum requirements below, there is compliance with such higher levels

Staffing

2. Managing Executives/Point-to-Point Organising Committees must ensure compliance with the minimum numbers of Medical Staff, as follows:

	Flat	Jump	Point-to-Point
Doctors	SRMO and RMO	SRMO & two RMOs	SRMO and RMO
JMR HCP (Nurse or Paramedic)	One	One	Not required
Ambulance Crews (see Part A of Annex B)	Two	Three	Two
Physiotherapist (see Annex A)	One	One	Not required
First Aiders	As per ARA/Green Guide	As per ARA/Green Guide	As per ARA/Green Guide
Crowd Doctor	As per ARA/Green Guide	As per ARA/Green Guide	As per ARA/Green Guide

Notes: Green Guide is the 'Guide to Safety at Sports Grounds'

Ambulances

3. Managing Executives/Point-to-Point Organising Committees must ensure the provision of the minimum resources, as follows:

   (a) Flat Meetings – two **dual crewed** paramedic ambulances

   (b) Jump Meetings – two **dual crewed** paramedic ambulances plus one other vehicle which may be a **dual crewed** paramedic ambulance or Rapid Response Vehicle (RRV)

   (c) Point-to-Point Meetings – two paramedic ambulances

   (d) Ambulance crews – each ambulance vehicle crewed by two staff. One must be a paramedic and the other a paramedic, ambulance technician, emergency care support worker, emergency care assistant or St John's emergency transport attendant. A rapid

response vehicle (RRV), if used, should be dual crewed including at least one paramedic. If the RRV is in addition to minimum BHAGI 11.2 provision it may be single crewed. All ambulances (other than RRVs) must be capable of transporting an injured rider to hospital whilst being appropriately monitored and treated. Vehicle selection for transfer should be principally governed by the clinical care needs of the patient during the transfer. During emergency journeys the ambulance driver must be someone trained and insured for emergency driving. The entire course must be accessible by an ambulance vehicle at all times and this may include the use of a 4x4 vehicle for initial retrieval subject to the course ARA.

Facilities

4. Managing Executives must ensure the presence on site of the minimum facilities/equipment as follows:

   (a) Jockeys Medical Room (JMR) which is compliant with Part B of Annex B

   (b) Jockeys Treatment Room (JTR) for physiotherapy which is compliant with Part E of Annex B

   (c) JMR drugs and equipment which is compliant with Part B of Annex B

   (d) (S)RMO drugs and equipment which is compliant with Part C of Annex B

   (e) Two-way radio system

4.1 Point-to-Point Organising Committees must ensure the provision of the minimum facilities, as follows:

   (a) Riders Medical Area (RMA) which is compliant with Part D of Annex B

   (b) (S)RMO drugs and equipment which is compliant with Part C of Annex B

   (c) Two-way radio system

Duties of Medical Staff

Registration and Qualifications

5. All SRMOs, RMOs, JMR staff (nurses or paramedics) and physiotherapists must be registered with the BHA Medical Department and must re-register annually. A Paramedic employed directly by the racecourse on a regular basis to staff the JMR should approach the BHA Medical Department to discuss registration and inclusion in the central indemnity policy.

6. Ambulance Providers must be registered with the CQC (or equivalent in Scotland and Wales) and their most recent inspection should be **'Requires Improvement'** or better. All ambulance Paramedics must have current HCPC registration. Other ambulance personnel must have evidence of appropriate qualification at a lower grade.

7. Staff may not work at Licensed Racecourses/Point-to-Point Courses if currently suspended by any other employer or regulatory body.

Raceday Procedure

General

8. On race days a member of the Medical Staff must:

- Arrive promptly at the designated time which is 90 minutes before the first race for the SRMO and 60 minutes before the first race for all other Medical Staff
- Be dressed in appropriate Personal Protective Equipment (PPE) to be able to deliver care in the pre-hospital environment and be clearly identifiable as Medical Staff by that uniform, name badge or other means
- Check their equipment is compliant with BHAGI 11. Any equipment or drugs for use on the racecourse in RMO bags, JMR or ambulances must be in date, serviceable and maintained in line with manufacturers' recommendations
- Report any equipment deficiencies to the SRMO immediately
- Attend the SRMO briefing 60 minutes before racing
- Read, understand and be compliant with current BHAGI, SO and other relevant documentation
- Act at all times according to their clinical decision making and not allow financial or racing operational considerations to override this judgement
- Ensure that they do not have any conflict of interest with any other activity or duty on a race day. **If in doubt they should** discuss the situation with the CMA
- Attend all Fallen Riders, if safe to do so, within one minute of their fall
- Stay in communication with the SRMO by two-way radio (VEMCOM) or mobile phone
- Not leave the course unless directed to do so by the SRMO
- Keep accurate and contemporaneous notes of all patient encounters on the electronic medical record (EMR) system, unless using ambulance paper records. Records must be entered by the assessing clinician under their personal login. On Point-to-Point Courses, unless the EMR is available, clinical notes must be entered on Medical Report Form A and the riders MRB and submitted to the BHA after racing. These records will be subject to regular audit.
- Follow the process set out at Annex C for Foreign and Amateur Riders
- Prevent unauthorised access to the JMR/RMA
- Only become involved in Anti-Doping cases when the donor is thought to be unwell and requires medical assessment
- Not divulge any information to any party that could be construed as a breach of patient confidentiality
- Remain on the racecourse after racing until stood down by the SRMO

Duties of Managing Executive/Point-to-Point Organising Committee

9. The Managing Executive/Point-to-Point Organising Committee, must ensure all aspects of race day medical care are compliant with BHAGI 11 confirming this with the SRMO, before both parties complete the Race Day Confirmation Form (Annex G) at least 30 minutes before the first race. If circumstances change and medical arrangements fall below those required by BHAGI 11 or local SO then the Managing Executive/ Point-to-Point Organising Committee, after appropriate consultation with the SRMO, must advise the Stewards/Point-to-Point Chair of Stewards and the CMA as soon as possible.

Duties of the RMOs

10. Be compliant with paragraphs 5 to 8 inclusive and local SO.

11. In the temporary absence (late arrival) of the designated SRMO, on the directions of the Managing Executive/Point-to-Point Organising Committee assume the responsibilities of the SRMO.

12. Examine Riders who require clearance to ride if designated as 'RMO clearance' on the EMR or Point-to-Point Red Entry List unless the Rider is a registered NHS or private patient of the RMO in which case another (S) RMO should assess the Rider.

13. During racing follow the deployment of staff as indicated in the SO and as instructed by the SRMO.

14. Assess Fallen Riders in sufficient detail to make a clinical judgement as to whether they are fit to continue riding or to be stood down for the rest of the day. If they are stood down, they must be given a 'RED/AMBER entry' on their EMR notes and where relevant in their MRB and Point-to-Point Medical Report Form A. Fallen Riders are not permitted to ride again until reassessed by an RMO, if a non-significant injury/illness (AMBER entry); or by the CMA (RED entry) and then an RMO, if a more significant injury (RED entry). Other than for simple suturing or assessment of possible concussion, an AMBER entry may not be removed on the day it is applied. Any Rider who is evacuated to hospital or is recommended to attend hospital e.g. for X-rays, or is concussed should be given a RED entry and the CMA notified by text as soon as possible.

Duties of the SRMO

15. General Duties:

- Be compliant with all Duties of the RMO
- Supervise all aspects of medical care for Riders and Fallen Riders including supervision of all medical, nursing and ambulance personnel
- Advise the nominated representative of the Managing Executive/ Point-to-Point Organising Committee if the SRMO has any doubts about the safety of racing, or the adequacy of medical cover and ensure these concerns are relayed to the Stewards/Chair of Stewards as soon as possible
- Use the attached Aide Memoire as guidance (Annex H)

16. Prior to Racing:

- Not later than 90 minutes before the time of the first race report to the nominated representative of the Managing Executive/Point to Point Organising Committee
- Arrange a time before racing to meet face to face with the Senior Vet, Head Groundsman, Clerk of the Course plus any other person likely to be involved in the management of a serious incident e.g. jockey entrapment, to clarify roles and responsibilities
- Identify Riders subject to medical suspension from the EMR Red/ Amber Entry List or from the Point-to-Point Red Entry List and not later than 75 minutes before the time of the first race, report to the Clerk of the Scales to confirm the Riders fit to ride and those who require clearance. If the EMR or Point-to-Point Red Entry List is unavailable, contact the BHA Medical Department during working hours or CMA out of hours and weekends
- Before Riders are due to weigh out, examine any Rider who has been the subject of an Amber medical suspension and take appropriate action to declare the Rider as fit or unfit to ride
- Examine any other Rider at the request of the Clerk of the Scales
- Notify and record the results of examinations of Riders:

  (i) to the Clerk of the Scales

  (i) on the EMR and/or

  (ii) in the MRB

  (iii) Point-to-Point Medical Report Form A (where appropriate)
- Not later than 60 minutes before the time of the first race, carry out a medical briefing (Annex F) and all necessary checks (of staff, equipment and communications) to ensure that medical arrangements on the racecourse are sufficient for racing to commence
- Not later than 30 minutes before the time of the first race, provide confirmation to the nominated representative of the Managing Executive/Point-to-Point Organising Committee that all medical criteria of BHAGI 11 and SO have been fulfilled, or that there is a shortcoming and details thereof, and deploy the Medical Staff
- Provide the necessary medical information, when required, to enable the Managing Executive/Point-to-Point Organising Committee to satisfy statutory legislation (including the Reporting of Injuries, Diseases and Dangerous Occurrences Regulations forms – RIDDOR)

17. During every race:

- Remain in radio communication with the nominated representative of the Managing Executive/Point to Point Organising Committee, and on-site medical and ambulance staff.
- Deploy medical resources as identified by the ARA including Medical Staff to cover the following key areas – parade ring, horse-walk, start and pull-up area

- Ensure that the RMO at the start confirms with the Starter that medical arrangements are in place and that the race may proceed
- Designate a reliable individual as 'spotter' (who may be non-clinical) who observes racing from a vantage point to relay information regarding fallers to the SRMO to help in deployment of medical resources
- Keep the nominated representative of the Managing Executive/Point to Point Organising Committee informed of events

18. After the last race:

- Check that all clinical encounters (including concussion screening and assessments) are recorded on the EMR or other record system by the treating clinician
- If the EMR is not functioning, enter all required information on the MRB3 form(s) or Medical Report Form A, bring these to the Managing Executive's attention and send these electronically to the BHA Medical Department medical@britishhorseracing.com immediately
- Unless already notified during racing, notify the CMA within **one hour** by telephone/text on 07788 567 440 of all RED entries and details of all Riders attending hospital. If unable to reach the CMA, leave a voice message with this information along with the SRMO's name and return contact number.
- Ensure the Notification of Injury Protocol is followed
- Confirm with the nominated representative of the Managing Executive/Point-to-Point Organising Committee when the Medical Staff can be released and when appropriate, stand down all Medical Staff having ensured no fallen rider who may require medical attention remains on site.

Duties of the **JMR Staff** (Nurse or Paramedic) (Licensed Racecourses only)

19. On race days **JMR Staff** must:

- Be compliant with paragraphs 5 to 8 inclusive and local SO
- Continuously occupy the JMR (unless deployed elsewhere by the SRMO) until stood down by the SRMO after the last race
- Ensure that JMR equipment and supplies are at all times immediately available and compliant with BHAGI 11
- At all times whilst on duty have access to radio communication
- If **the usual JMR Staff member** is not available the role may be filled by a doctor or paramedic.

Duties of First Aiders

20. First aiders should follow the instructions of the SRMO regarding deployment. The SRMO should deploy first aiders where needed as per the SO and following the ARA.

Duties of Ambulance Personnel

21. On race days ambulance personnel must:

- Be compliant with paragraphs 5 to 8 inclusive and local SO
- Ensure that ambulances are available for immediate use from at least 15 minutes before the start of the first race or the time of any stalls test until released by the SRMO unless transferring an injured rider to hospital
- Be positioned as per the SO with engines running during racing.
- Only use ambulances to transport ambulance crew, (S)RMOs, and injured Riders
- Be fully familiar with the stock, location and use of any drugs and equipment required to be on the ambulance
- Be fully familiar with the driving routes to local hospitals and trauma centres
- Be qualified and insured to drive an ambulance on a public highway under emergency response driving conditions

Duties of Physiotherapist (Licensed Racecourses only)

22. Be compliant with paragraphs 5 to 8 inclusive, the Racecourse Physiotherapy SLA and local SO.

Race Day Protocols

Fallen Rider: Assessment and Treatment

23. In treating injured Riders, Medical Staff must note that a Rider's clinical need overrides all other concerns and must take priority. In respect of a Fallen Rider, Medical Staff must:

- Respond to the Fallen Rider within one minute if safe to do so
- Examine the Fallen Rider, regardless of whether they remount, assess whether there is a time critical injury or illness and establish the Rider is not a risk to themself or others as a result of the fall
- Provide any immediate and necessary treatment
- Decide whether the clinical condition of the Fallen Rider warrants immediate evacuation to hospital
- Complete all necessary administration, including the Notification of Injury Protocol

24. If the Fallen Rider appears on initial assessment to have significant injuries warranting hospital assessment, they should be evacuated immediately from the scene to hospital in the attending course ambulance unless transfer to another course ambulance or helicopter is **clinically** more appropriate:

- Two clinicians should discuss and document the best means of transport, destination hospital based on local trauma network protocols, supervision en route and treatment to ensure the Rider arrives at hospital in the best possible medical condition

- The receiving hospital should be telephoned by a member of the Medical Staff regarding the transfer and the Rider accompanied by appropriate notes including details of mechanism of injury
- Notify the CMA as soon as possible after the incident by text or telephone call

25. If the Fallen Rider appears to have no, or minor injuries, but a period of observation is clinically appropriate:

    - Carry out a full examination including concussion screening and spinal assessment of the Rider in the JMR or the RMA and after monitoring them:

        (a) Discharge them with clear, documented and ideally written instructions, for on-going care, or

        (b) Arrange transfer to hospital in a clinically timely fashion using appropriate transport

    - Two clinicians should discuss and document the best means of transport, destination hospital based on local trauma network protocols, supervision en route and treatment to ensure the Rider arrives at hospital in the best possible medical condition. If an ambulance transfer is required the expectation is that this will be undertaken using a racecourse ambulance.

26. If the Fallen Rider appears to have no injury after a comprehensive assessment on the course, and the Vet agrees the horse is safe to ride, the Rider may remount and, if on the way to the start, compete in the race or, if during racing, return the horse to the unsaddling area. Fallers on the way to the start may be assessed immediately or on arrival at the start by a Paramedic or S(RMO). On return to the weighing room area, Medical Staff must confirm with the Rider that no injury has become apparent and reassess as necessary.

<u>Fallen Rider: Administration</u>

27. Notify the Clerk of the Scales as soon as possible if the Fallen Rider is a Foreign Rider and, for all Fallen Riders, advise whether the rider is medically fit to attend any Stewards Enquiry

28. Make an entry on the EMR or paper record (Medical Report Form A at a Point-to-Point) concerning a fall and/or details of any injuries, details of the examination and, if applicable, the Red Entry.

29. If appropriate, make an entry in the Recordable Accidents section of the Rider's MRB or, if this is not available, complete a Medical Record sheet temporary replacement containing details of the Recordable Accident or illness which renders the Rider unfit to ride.

30. If a Fallen Rider refuses to accept medical examination or advice, obtain the Rider's signature on a Discharge Against Medical Advice form and give the Rider a RED Entry. A Fallen Rider who fails to attend for medical examination should be given a RED Entry.

31. Follow the RCA Notification of Injury Protocol.

32. Inform the nominated representative of the Managing Executive/ Point-to-Point Organising Committee if a Paramedic Ambulance leaves the racecourse during racing and whether racing may continue.

<u>Fallen Rider: Concussion</u>

33. All fallers should be considered to be concussed and must be screened on return to the weighing room complex/JMR. In all cases of suspected concussion, the RMO or SRMO must:

- Carry out an assessment of the Rider in accordance with the BHA MEDICAL DEPARTMENT CONCUSSION STANDARD OPERATING PROCEDURE
- Apply clinical judgement to determine the final diagnosis and management of the Rider

Attached:

Registration and Disciplinary Procedures	Annex A
Medical Provision and Facilities	Annex B
Foreign, Amateur and Point-to-Point Riders	Annex C
Role of the Managing Executive/Organising Committee (and Nominated Representatives)	Annex D
Information to be Included in the Standing Orders	Annex E
SRMO Briefing	Annex F
Race Day Confirmation Form	Annex G
SRMO Aide Memoire	Annex H
Useful Links and Contact Numbers	Annex I

ANNEX A – Registration and Disciplinary Procedures

Registration Process

On a yearly basis all Medical Staff (except first aiders, crowd doctors and ambulance personnel – see notes 5 and 6) must (re)register with the BHA. This includes any paramedic directly contracted by the racecourse to staff the JMR.

Reminders will be sent to the Clerks of the Courses/Point-to-Point Organising Committees and previously registered staff in November. Notification of satisfactory registration will be sent by email to the practitioner (and the principal Licensed Course they nominate) and they should notify any other racecourses where they work/PPA.(for Point-to-Point Doctors). Failure to provide the requested information will result in removal of the individual from the BHA Register and suspension of access to the EMR.

The online system can be accessed at:
https://www.cognitoforms.com/BritishHorseracingAuthority/MedicalStaffRegistrationForm

Requirements

	Full Registration Professional Body, without restriction e.g. GMC	Current Appraisal	BLS and AED training in last 12 months (note 2)	Trauma Course in last 3 years (note 1)	Moulage practice on course in last 12 months (note 3)	Indemnity cover for work at racecourse	DBS (note 8)
SRMO (note 4)	R	RE	RE	RE	RE	RE	R
RMO	R	RE	RE	RE	RE	RE	R
JMR Staff (Nurse or Paramedic)	R	OE	RE	OE	RE	RE	R
Physio-therapist (note 5)	R	RE	RE	OE	OE	RE	R

R – Required O – Optional E – Evidence Required

Note 1: Approved trauma courses are those with approval by the Faculty of Pre-Hospital Care or by one of the UK Royal Colleges and should cover Pre-Hospital Care ideally with an equestrian or sporting emphasis. For racing these courses are valid for three years regardless of the expiry date on any certificate issued. Those clinicians wishing to cover Pony Racing should ensure their chosen course includes paediatric trauma training.

Note 2: Equivalent Experience. If the clinician's current practice includes regular provision of resuscitation for trauma and medical cases in the Pre-Hospital setting or Emergency Department, or they have taught on an approved course in the last 12 months 'equivalent experience' may be requested in lieu of BLS/AED, and/or a formal Trauma Course. To do so either provide evidence (e.g. Faculty List) of teaching on a relevant course, or a letter from a senior colleague stating that they have witnessed you effectively managing a traumatic or medical resuscitation in the last 12 months to a level equal to or higher than ATLS and/or ALS (whichever is relevant).

Note 3: On at least an annual basis, clinicians must undertake practical training on at least one racecourse where they work to rehearse clinical scenarios including scene safety, immediate medical care and casualty extraction. There should be a 'table-top' Major Incident rehearsal. This should include ambulance providers and other relevant staff e.g. racecourse employees. Documentary evidence of this should be provided by the organising SRMO and Clerk of the Course to be submitted with the next registration

cycle. This is not required for Point-to-Point but is strongly recommended.

Note 4: New SRMOs on Licensed Racecourses will fall into 3 categories: SRMO(Flat); SRMO(Jump); and SRMO(Dual). In order to be appointed as an SRMO, new applicants must meet the following criteria:

- An SRMO is an RMO who has officiated at a minimum of 30 race Meetings flat or jump to achieve the necessary designation. Dual qualification requires a total of 40 race Meetings with at least 10 flat or jump; and
- Has acted as a probationary SRMO for 5 (5 of each if dual qualified) of those Meetings with another SRMO present; and
- Has undertaken an approved SRMO course; and
- Has been assessed whilst acting as an SRMO at one race Meeting (flat or jump) by a BHA appointed assessor

SRMOs must act as Senior for at least 4 race Meetings over 2 years to retain their SRMO status.

Doctors who worked on Point-to-Points as Senior RMO prior to registration cycle commencing 1 January 2018 will automatically be eligible to continue to do so. New applicants should contact the CMA directly to discuss the requirements.

Note 5: Persons retained by the Managing Executive to provide physical and massage therapy for Riders on race days must comply with the current 'Physiotherapy Service Level Agreement ' jointly agreed by BHA, RCA, IJF and PJA.

Note 6: First aiders must hold certification from an organisation compliant with the Health and Safety (First-Aid) Regulations 1981 which is valid and current according to the HSE regulations for first aid at work. Employers should consider DBS or equivalent checks on these staff.

Note 7: It is recommended that Managing Executives/Point-to-Point Organising Committees that employ crowd doctors follow advice from The Sports Grounds Safety Authority (SGSA) as they fall outside the remit of BHAGI 11.

Note 8: Initial DBS registration will need to be organised by the practitioner possibly through another employer.

Note 9: Doctors in Training Grades should ensure they discuss their supervisory requirements with their Educational Supervisor or other suitable member of staff.

Disciplinary Process

Medical Staff are reminded that under the terms of their registration with the BHA, if they have any concerns regarding the health (physical or psychological) or competence of themselves or their colleagues which may interfere with the ability to deliver safe and effective care, they should report this as soon as practical to the CMA. Any disciplinary investigation by a non-racing employer or regulatory body should be reported by the individual to the CMA.

Failure to comply with the requirements of the annual registration process will result in the temporary suspension of the registration of the practitioner which will also impact the BHA Indemnity cover. Racecourses which employ an individual as a member of the Medical Staff who is not on the current BHA Register will be in breach of BHAGI 11 and therefore liable to sanction.

In the event of information being received by the CMA which raises concern about a practitioner, the following steps will be taken:

- The BHA Head of Integrity and Head of Race Day Operations will be informed of the non-clinical aspects of the case and will be kept abreast of developments. For Point-to-Point the PPA will be informed.
- A written report will be requested from the informant/practitioner/ Managing Executive/Point-to-Point Organising Committee
- The clinical aspects will be discussed with the SRMO Advisory Group and when relevant the PPMA, excluding any member who may be subject to enquiry
- Further advice may be sought informally and anonymously from the GMC and/or experts in the field
- If warranted, a formal discussion will then take place with the Responsible Officer (RO) of the practitioner who will then take over any further action including possible referral to the GMC and liaison with employers. Only if recommended by the RO will the practitioner be suspended from the BHA Register
- A written report will be sent to the practitioner, the Managing Executive and the BHA Head of Integrity and Head of Race Day Operations (and PPA when relevant) when a conclusion is reached, or when significant events warrant earlier communication
- Following enquiries possible outcomes include:

  (i) no action

  (ii) written warning

  (iii) conditions placed on ability to practice on a racecourse

  (iv) suspension or removal from the BHA Register

Concerns that are not of clinical significance, e.g. repeated lateness, should be dealt with at a local level on a contractual basis by the Managing Executive/Point-to-Point Organising Committee.

ANNEX B – Medical Provision and Facilities

Part A: Ambulance Requirements

Ambulance providers must comply with the following requirements and in addition give details to the Managing Executive/Point-to-Point Organising Committee of their governance processes particularly with reference to:

- Ensuring their staff are registered and suitably trained to deliver care to all individuals present on a race day
- Stock control of drugs and equipment, including any arrangements to supply (S)RMOs with any drugs or equipment for use on racedays and the associated governance thereof.
- Vehicle malfunction

Vehicles

The racecourse must enter into a contract with an ambulance provider to supply sufficient numbers of ambulances and ambulance personnel to ensure that at the start of any Meeting there are at least two paramedic ambulances available. For jump Meetings a third vehicle is required which may be a paramedic ambulance or rapid response vehicle (RRV). This provision should be separate from that required for spectator cover. It is recommended that due to hospital transfer/handover times consideration is given to having an extra ambulance available so that the on-site resources do not fall below a safe minimum level.

If required by the SO, the racecourse or ambulance provider must supply a suitable vehicle and driver for the (S)RMO to follow the field. This may be one of the ambulance vehicles referred to in the preceding paragraph.

The entire course must be accessible by an ambulance vehicle at all times. Ambulance providers must supply a range of vehicles suitable both for accessing the track (e.g. 4x4) and for delivering care to an injured patient during hospital transfer.

The racecourse should make provision to retrieve any medical vehicle that gets stuck in mud. Provision must be made in the event of an ambulance becoming non-functioning as a result of breakdown to repair or replace it to allow racing to continue as soon as possible.

In the event that at a flat Meeting a Rider is transported to hospital in a course ambulance racing may continue as long as the following criteria are met:

- the remaining one paramedic ambulance is fully equipped to BHAGI 11 and is not depleted of any ambulance personnel or significant equipment following any earlier incident and can access all areas of the course
- the (S)RMO is not transported in the remaining ambulance
- two (S)RMOs remain on the course
- a clear protocol exists to effectively call in an NHS vehicle in the event of multiple fallers
- this process is supported by the ARA and the SRMO is confident that timely, appropriate care can be delivered to any fallen Rider.

In the event that at a jump Meeting a Rider is transported to hospital in a course ambulance racing may continue as long as the following criteria are met:

- the remaining two paramedic vehicles are fully equipped to BHAGI 11 and not depleted of any ambulance personnel or significant equipment following any earlier incident and all areas of the course can be accessed.
- two (S)RMOs remain on the course
- a clear protocol exists to effectively call in an NHS vehicle in the event of multiple fallers
- this process is supported by the ARA and the SRMO is confident that timely, appropriate care can be delivered to any fallen rider.

In the event that at a Point-to-Point Meeting a Rider is transported to hospital in a course ambulance racing may continue as long as the following criteria are met:

- the SRMO remains on the course and is satisfied that it is safe to continue to race
- a minimum of three medical resources remain on the course (two doctors, one paramedic ambulance or one doctor, two paramedic ambulances)
- the remaining paramedic ambulance(s) is fully equipped to BHAGI 11 and is not depleted of any ambulance personnel or significant equipment following any earlier incident and can access all areas of the course
- a clear protocol exists to effectively call in an NHS vehicle in the event of multiple fallers
- this process is supported by the ARA and the SRMO is confident that timely, appropriate care can be delivered to any fallen rider.

Staffing

Ambulances must be staffed by a minimum of two ambulance personnel, comprising one paramedic plus one paramedic or ambulance technician or emergency care support worker, emergency care assistant (ECA) or St John's emergency transport attendant. Any RRV should be dual crewed and include at least one paramedic. An RRV on-site in addition to the BHAGI 11.2 minimum requirement can be single crewed by a paramedic. Paramedic students can only attend in a supernumerary capacity unless fulfilling the role of First-Aider for which they should be suitably qualified.

Staff must be familiar with the use and location of the equipment held on their vehicles

Equipment and Supplies

Ambulances must contain and have immediately available the following equipment. All gloves, airway and IV equipment must be latex free and disposable. This list represents the minimum provision:

Immobilisation Devices

- A set of box splints or vacuum splints
- Femoral traction splint (e.g. Kendrick)
- Pelvic binder (e.g. SAM Sling)
- Scoop stretcher with head immobilisers and immobilisation straps

- Vacuum mattress

Airway equipment

- Bag valve mask device (disposable)
- Electronic suction unit (portable) plus disposable Yankauer and flexible suction catheters
- Oropharyngeal airways (sizes 0, 1, 2, 3 and 4)
- Nasopharyngeal airways (sizes 6 and 7)
- Supra-glottic airways sizes 3,4,5 plus fixation device (if required)
- Non-rebreathing oxygen masks
- Transfer monitor to include ECG, NIBP, SaO2, capnography. If not available a separate ETCO2 monitoring device is needed in the vehicle used for hospital transfer
- Nebuliser Masks
- Portable oxygen and flow meter system capable of supplying up to 15 litres/minute for no less than 30 minutes, with one fully charged, reserve cylinder in addition to any vehicle mounted supplies.
- Entonox or nitronox (nitrous oxide 50%/oxygen 50%) kit + one fully charged reserve cylinder **and**/**or** two Methoxyflurane (Penthrox) inhalation devices

Vascular Access Equipment and supplies

- Crystalloid intravenous fluids 0.9% saline – minimum 2 litres
- Giving sets crystalloid – minimum 4
- Hypodermic needles (minimum of 12 in a range of sizes)
- Intravenous cannulae (minimum of 12 in a range of sizes suitable for trauma and medical cases including administration of blood products)
- Cannulae dressings
- Intraosseous vascular access system
- Sharps box
- Syringes (minimum of 12 in a range of sizes to support clinical care e.g. drug administration via various routes)

General equipment

- Dressings and bandages
- Haemostatic agent/dressing
- Haemorrhage control tourniquet e.g. CAT
- Defibrillator (preferably an AED) with 2 sets of chest leads/pads
- Gloves (non-latex)
- Pulse oximeter
- Sphygmomanometer
- Stethoscope

- Triangular bandages or sling
- Venous tourniquet
- Blood glucose testing equipment
- Ten Second Triage toolkit

Drugs

- Adrenaline (Epinephrine) 1mg 1:10,000 injection for I/V use (10ml x 5)
- Adrenaline (Epinephrine) 1mg 1:1,000 injection for I/M or S/C use (1ml x 2)
- Amiodarone Hydrochloride 300mg injection (by I/V injection from a pre-filled syringe or diluted in 20ml glucose 5%) (x1)
- Anti-emetic injection (practitioner's choice – e.g. ondansetron 4mg/2ml or prochlorperazine 12.5 mg (x2)
- Aspirin 300mg for oral use (x5)
- Atropine sulphate injection (minimum 600mcg) (x2)
- Benzodiazepine for rectal, buccal or intranasal administration (x2)
- Benzodiazepine injection (e.g., midazolam, Diazemuls®) (x2)
- Benzylpenicillin 600 mg injection (x2)
- Pre-hospital antibiotic regime for open fractures as recommended by local MTC microbiologist or local NHS Ambulance Service Guidelines
- Glucose infusion 10% (1 x 500ml) (x1)
- Glucose 40% oral gel (x1)
- Glyceryl Trinitrate (GTN) spray 400mcg/dose (x1)
- Hydrocortisone injection 100mg ampoule (x2)
- Injectable opiate analgesia for severe pain. A minimum of SIX 10mg ampoules of morphine (or an equivalent supply of diamorphine), divided between two different medical personnel, who are not deployed together to the same location should be available at each course
- Naloxone hydrochloride injection 2mg in total
- Non-sedating oral antihistamine (e.g. cetirizine 10mg x 5)
- Paracetamol intravenous preparation 1g per 100 ml (x2)
- Salbutamol nebules 5mg (x5)
- Tranexamic acid 500mg in 5ml **(x4)**
- Water for injection (5 x 10mls)
- Normal saline for injection (5 x 10mls)

Part B: Jockeys Medical Room (JMR) requirements (Licensed Racecourses only)

The racecourse must provide a JMR (see Racecourse Manual for recommended dimensions) situated near to the jockeys' changing room which must:

- Have adequate lighting, ventilation and heating
- A self-contained private toilet
- Contain at least two medical grade couches (ideally height adjustable) allowing free access on both sides with disposable screening curtains. Hospital grade beds may be used instead of couches if they have removable bed-ends, are wheeled and suitable to perform CPR upon
- Lockable storage space for medical/physiotherapy equipment
- Space for a dressing trolley
- Privacy – conversation should not be overheard from outside the room
- Sheets (if used) – disposable or roll paper available for each patient with antiseptic wipes available for use between patients.
- Spot lighting – suitable for stitching (can be free-standing or wall mounted).
- Electrical sockets – sufficient for any electrical equipment
- Hand basin – preferably with elbow taps, paper towels, liquid cleanser dispenser or antiseptic hand wash
- Easily cleaned, hygienic working surfaces and floor covering (non-slip)
- Sharps disposal box (as provided by an accredited hygiene system, or a local hospital arrangement)
- Clinical waste bin (as provided by an accredited hygiene system, or a local hospital arrangement)
- Clean waste bin
- Body Fluids Spillage Kit - optional
- Dressings trolleys/trays
- Good access for an ambulance stretcher/trolley.
- Contain a functioning telephone with a dedicated outside line which cannot be blocked by incoming calls
- Hard wired internet access or reliable Wi-Fi service
- Contain a two-way radio at all times with adequate signal
- Contain a television monitor to view the racing
- Contain a copy of the BHAGI, SO, ARA, Major Incident Plan and a detailed inventory of all drugs and equipment held in the JMR.
- Only be used for attending to injured riders, unless dispensation has been obtained from the BHA Medical Department
- 3 Metre line on floor with access on all sides to assess concussion.

Equipment and Supplies

Airway equipment

- Bag valve mask device (disposable)
- Electronic suction unit (portable) plus disposable Yankauer and Flexible Suction Catheters;
- Oropharyngeal (O/P) Airways (sizes 0, 1, 2, 3 and 4)
- Nasopharyngeal airways (sizes 6 and 7)
- Supraglottic airways sizes 3,4,5 plus fixation device (if required)
- Non-rebreathing oxygen masks
- Nebuliser masks
- Oxygen and flow meter system capable of supplying up to 15 litres/ minute for no less than 30 minutes, with one fully charged, reserve cylinder (minimum of 2 cylinders CD size)

Intravenous Equipment and supplies

- Crystalloid intravenous fluids – minimum 2 litres, (0.9% saline)
- Giving sets for crystalloid – minimum 4
- Hypodermic needles (minimum of 12 in a range of sizes suitable for infiltration, SC and IM injections and drawing up drugs)
- Intravenous cannulae (minimum of 12 in a range of sizes suitable for trauma and medical cases including administration of blood products)
- Cannulae dressings
- Sharps box
- Syringes (minimum of 12 in a range of sizes to support clinical care e.g. drug administration via various routes)

Drugs*

- Adrenaline (Epinephrine) 1mg 1:10,000 injection for I/V use (10ml x2)
- Adrenaline (Epinephrine) 1mg 1:1,000 injection for I/M or S/C use (1ml x2)
- Amiodarone hydrochloride 300mg injection (by I/V injection from a pre-filled syringe or diluted in 20ml glucose 5%) (x1)
- Anti-emetic injection (practitioner's choice – e.g. ondansetron 4mg/2ml or prochlorperazine 12.mg (x2)
- Atropine sulphate injection (minimum 600mcg) (x2)
- Pre-hospital antibiotic regime for open fractures as recommended by local MTC microbiologist or local NHS Ambulance Service Guidelines. This can be carried by the ambulances or held in the JMR
- Glucose infusion 10% (1 x 500ml) (x1)
- Glucose 40% oral gel (x1)
- Hydrocortisone injection 100mg ampoule (IM or IV) (x2)

- Local anaesthetic injection (for suturing) (x5)
- Paracetamol intravenous preparation 1g per 100 ml (x2)
- Salbutamol inhaler 100mcg/dose
- Inhaler spacer device or electric nebuliser
- Salbutamol nebules 5mg (x5)
- Water for injection (5 x 10mls)
- Normal saline for injection (5 x 10mls)
- Saline for eye irrigation

* The JMR list of Intravenous Equipment and Supplies and Drugs are not required if all of the following apply:

- a Paramedic crewed ambulance or RRV (paramedic plus one other staff member employed by the Ambulance Provider) is continuously located next to the JMR during the race-meeting and the crew are contracted to work exclusively from this location AND
- the JMR required list of Intravenous Equipment and Supplies, and the Drugs are on the aforementioned ambulance or RRV AND
- the ambulance crew are trained in the use of the Drugs and Equipment AND
- the vehicle and crew is in addition to any other ambulances or staff required on site to covering racing or the crowd
- If the vehicle and crew are not present at anytime then the JMR shall be deemed to be non-functioning and racing should be suspended.

<u>Oral Medications</u>

- Antacid (practitioner's choice – tablets or liquid)
- Antihistamine (practitioner's choice)
- Aspirin 300mg
- NSAID (practitioner's choice)
- Paracetamol 500mg

<u>General Equipment</u>

- Dressings, bandages, adhesive tape
- Defibrillator (preferably an AED) with 2 sets of pads
- Gloves (non-latex)
- BHA Head Injury Advice Leaflets
- Patella hammer
- Pulse oximeter
- Sphygmomanometer
- Sterile suture kits – disposable
- Sutures – range of sizes and materials. May include skin stapler and remover.

- Steristrips or skin glue (Practitioner's choice)
- Stethoscope
- Thermometer – digital/electronic aural only (not mercury/bulb)
- Upper arm slings
- Urine dipsticks (to detect haemoglobin and glucose)
- Venous tourniquet

Note: Ice now in JTR

Part C: RMO Medical Equipment

A RMO's medical bag must contain the following latex-free equipment and should be carried at all times:

Airway Equipment

- Nasopharyngeal Airways (N/P) (sizes 6 and 7)
- Oropharyngeal (O/P) Airways (sizes 1,2,3,4,)
- Pocket mask or Bag Valve Mask

Intravenous Equipment and Supplies

- Hypodermic needles (minimum of 6 in a range of sizes suitable for infiltration, SC and IM injections, and drawing up drugs)
- Intravenous cannulae (minimum of 6 in a range of sizes suitable for trauma and medical cases including administration of blood products
- Cannula dressings
- Sharps Box
- Syringes (minimum of 6 in a range of sizes)

Drugs

- Adrenaline (Epinephrine) 1mg 1:1,000 injection for I/M or S/C use (x1) or one adult auto-injector

General Equipment

- Gloves (non-latex)
- High visibility identification (unless on PPE)
- Stethoscope
- Venous tourniquet
- Tape, triangular bandage, trauma wound dressing
- Tuff-Cut shears/scissors or equivalent
- Haemorrhage control tourniquet e.g. CAT
- A detailed list of all drugs and equipment held in the bag.

Part D: Riders Medical Area (RMA) (Point-to-Point Courses only)

Point-to-Point Courses must provide a **RMA*** situated near to the jockeys' changing room or weighing room which must:

- Have adequate lighting, ventilation and heating
- Contain an examination couch or ambulance trolley-bed.
- Privacy – conversation should not be overheard from outside the room

*** A high-top ambulance in addition to those required to cover racing can be used as a RMA**

Part E: Jockeys Treatment Room (JTR) (Licensed Racecourses only)

Suitably furnished accommodation situated near to the jockeys' changing room is to be provided for a separate JTR for physiotherapy treatment, which contain the following:

- Adequate heating, lighting, power and hot water supply
- A treatment couch with a breathing hole which is height adjustable when a patient is being treated
- Sufficient floor space allowing free movement around the whole of the treatment couch
- Connectivity to the HRS-RACO Wi-Fi network
- In locations where there are no means of direct communication with other Medical Staff, access to the RMO radio channel is required
- A TV monitor screening live coverage of the racing allowing the therapist to observe and prepare for any acute injuries
- Clinical waste bin
- Chair and desk/table
- Small fridge or cool box (at least 24l size) filled with ice (preferably crushed)

ANNEX C – Foreign, Amateur and Point-to-Point Riders

Foreign (excluding Irish Licence Holders), Amateur and Point-to-Point Riders must be dealt with as follows by Medical Staff:

1. The Declarations Clerk (if present) must obtain the Rider's MRB upon their arrival at the racecourse and pass this to the Clerk of the Scales for the MRB to be scrutinised by the (S)RMO.

2. The (S)RMO must:

   - Review any notification sent to them by the BHA Medical Department indicating that the jockey has already been identified and is currently coded as an Amber Entry under the illness chapter on the EMR. If so once any checks are completed the jockey should be cleared in the normal fashion
   - Review the Rider's MRB. (S)RMOs must be aware that entries made in a MRB by Point-to-Point Doctors, Arabian Race Doctors or other Doctors should be examined with particular care as they may not be in red ink and may not conform with entries under the Rules
   - Cross reference with any Red/Amber Entry list supplied electronically or on paper by the BHA and check the EMR
   - If an Amateur Rider or Point-to-Point Rider attends without an MRB and is not on the EMR they are not permitted to ride unless the SRMO has prior approval from the CMA or their deputy
   - Decide whether the Foreign Rider needs to be examined as per the flow chart below and if so complete an NMED016 form and return to BHA Medical

3. The Rider must sign an Attestation/Point-to-Point Declaration Certificate confirming that they are not subject to any suspensions and are free from injury on the day of racing.

4. If the Rider suffers from any serious injury (including concussion):

The Clerk of the Scales will:

- Inform the BHA Licensing Department as soon as possible, so that notification with the details may be sent to the Turf Authority with whom the Rider is licensed. If such an injury occurs on a Saturday, the Clerk of the Scales will telephone the information to Weatherbys on the following Sunday morning, so that an immediate message may be sent; and
- Amend the Attestation Certificate accordingly

The (S)RMO must:

- Notify the CMA by text/phone
- Enter the Rider on the EMR. If the Rider is not listed, complete an MRB3 form and send it to the BHA Medical Department as soon as possible. For Point-To-Point details must be entered on the Medical Report Form A and sent to the BHA Medical Department as soon as possible.
- Add details of the injury and the recommended period of medical suspension from riding to the Attestation Certificate

- Countersign the Attestation Certificate if the Rider is from another country which does not issue MRBs

At the conclusion of racing, the Clerk of the Scales will:

- Complete the Attestation Certificate, recording whether or not the Rider has suffered an injury, and whether or not they have incurred a period of medical suspension
- The Attestation Certificate will then need to be returned to BHA Medical Department for onward transmission to the parent Turf Authority

5. In the event that an Amateur Rider suffers an injury, an entry must be made on the EMR and in the Rider's MRB.

Riders Licensed Outside GB & Ireland without a Medical Record Book (MRB)

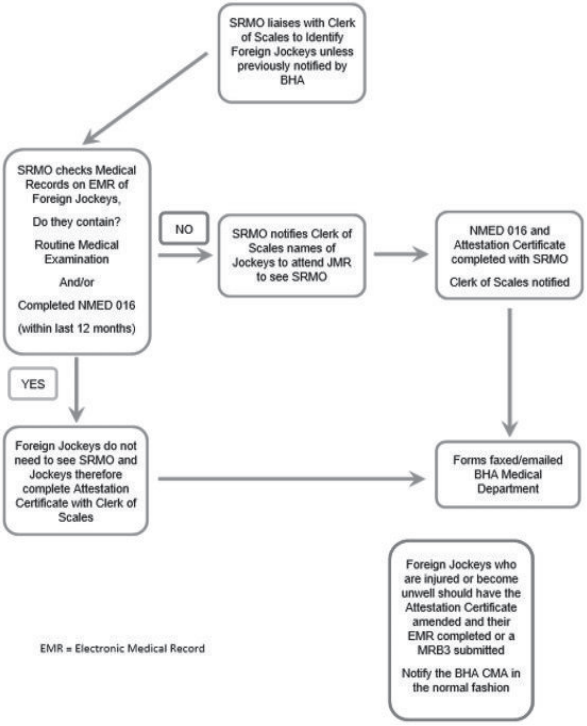

ANNEX D – Role of the Managing Executive/Point-to-Point Organising Committee (and their Nominated Representative)

The Managing Executive/Point-to-Point Organising Committee must:

General Duties

- Take responsibility for compliance with legislation or Government guidance on the provision of Medical Services for attendees at Sporting and Cultural Events
- Ensure any amendments to official guidance from the BHA, PPA, RCA and other parties is communicated to the medical team
- In conjunction with the SRMO, annually complete the following matters:
    - Undertake an ARA of their course in consultation with the SRMO and ambulance provider, with reference to medical provision, to ensure that the minimum standards set out in the BHAGI 11 are adequate to safely cover their courses in respect of the numbers and types of Riders, spectators and the local geography.
    - The ARA must take into account historical falls/injury data for that course. Each year the BHA Medical Department will, on request, circulate falls data and where available injury and hospitalisation data for each course. Jump Courses with injury rates (or, if not available, falls rates) higher than the mean (average) must clearly justify in their ARA why they can safely operate with two ambulance vehicles in the event that the third ambulance vehicle has taken an injured Rider to hospital.
    - Review the racecourse's SO
    - Confirm registration of RMOs and nurses with BHA Medical Department
    - Support training of RMOs and nurses including practice recovery session
    - Consider written contracts for the following if operational on the racecourse – RMOs, ambulance providers, nurses, physiotherapists, first aiders and voluntary services.
    - Exemptions (from BHAGI 11) agreed by the BHA
    - Prepare a Medical Major Incident Plan
    - Ensure compliance with the BHA Racecourse Annual Medical Audit and associated inspections.

On race days

- Appoint a nominated representative for all medical matters
- Ensure that the requirements and procedure outlined in BHAGI 11 are complied with in all aspects
- Following consultation with the SRMO, complete the Race Day Confirmation Form (Annex G) in paper or electronically and pass it to the Stewards/Chair of Stewards no later than 30 minutes before the scheduled time for the start of the first race

- Inform the Stewards/Chair of Stewards as soon as possible if the required Medical Staff or ambulances are not present or if there is non-compliance with BHAGI 11
- Make the Declarations Clerk aware of their responsibility for the MRBs
- Place notices in the weighing room to:
    - Designate the position in the weighing room where the RMO can be found after each race
    - Require all Riders to report to an RMO on every occasion immediately after they have had an accident or a fall (including Riders who have been given permission on course to remount after a fall)
- Satisfy themselves that all Medical Staff attending jump and Point-to-Point Meetings are conversant with applicable by-passing procedures
- After the end of racing, give permission for the ambulance personnel to leave the racecourse in consultation with the SRMO
- Advise the Stewards to call an immediate halt to racing if the requirements and procedures outlined in BHAGI 11 are not being complied with and, in the judgement of the SRMO, patient safety would be compromised.

On Licensed Racecourses, where a Managing Executive has been found in breach of Rule (B)45 in respect of a matter or matters within the scope of the duties of the SRMO, the BHA will normally notify the Managing Executive that they may not employ the SRMO in this capacity until they have successfully completed a further training for SRMOs agreed to by the BHA. Where such notification is given, the Managing Executive may continue to employ the SRMO, but only as an RMO. This restriction will apply across all racecourses.

ANNEX E – Information to be Included in the Standing Orders

The Standing Orders (SO) of a Licensed Racecourse/Point-to-Point Course must include details of:

- The organisation and operation of all the medical services on the racecourse/point-to-point course
- Details of the location and personnel who will perform concussion screening of all fallers as per the BHA Concussion Protocol
- The deployment of medical resources including the location and deployment of RMOs and ambulances at the start, during and after each race for and starting stalls tests
- Procedures relating to flag, radio and telephone communications including back-up systems and confidentiality
- By-passing procedures
- A detailed plan of the racecourse/point-to-point course, clearly showing ambulance access points, parking points and all medical facilities including the JMR/RMA.
- A list of all the Medical Staff employed by the racecourse/ point-to-point course with primary contact details and those of the ambulance provider
- A summary of the Local Trauma Network's standard operational procedures (e.g. flowchart) for the transport of patients to a trauma centre
- Location of, routes to, and specialties and grades of local hospitals
- Any dispensations from the BHA
- Month and year updated.

ANNEX F – SRMO Briefing

General

Not later than 60 minutes before the time of the first race, deliver the briefing to all Medical Staff.

Confirm equipment in the following locations has been checked and complies with BHAGI 11 requirements:

- Ambulances
- RMO bags
- JMR/JTR/RMA

The briefing should include:

- Deployment and actions of all Medical Staff for each type of race on the card by reference where possible to a large wall map of the course
- Confirm all Medical Staff have read and understood the most recent versions of BHAGI 11 and the SO
- Emphasise personal safety when attending to fallers within the one minute response time
- Explanation of the arrangements for by-passing fences and entrapement
- Explanation and confirmation of communication arrangements including undertaking a radio check and highlighting the non-secure nature of some radio networks.
- Ensure all staff are easily identifiable as Medical Staff and wearing correct PPE whilst working
- Confirm management of casualties, evacuation from track and JMR
- Confirm arrangements (personnel/location) of concussion screening for all fallers
- Confirm destination hospitals for that day
- Confirm Physiotherapist present (Licensed Racecourses only)
- Major Incident alerts, rendezvous points, and roles.
- Reminder of Notification of Injured Jockey procedure and BHA Assessment of Concussion SOP

ANNEX G – RACE DAY CONFIRMATION THAT MEDICAL ARRANGEMENTS MEET BHAGI SECTION 11 (paper or electronic version)

We the undersigned confirm that the medical arrangements at

..... Racecourse/Point-to-Point Course

on ..... (date)

meet the requirements of BHAGI section 11 and that racing may commence. In particular, we confirm that detailed checks for compliance have been carried out with regard to the following:

- **(S)RMOs, RMOs, physiotherapists and nursing staff are registered with the BHA Medical Department**
- **Equipment held by the JMR, RMOs and ambulances are compliant with BHAGI 11**
- **All Medical Staff have received a full briefing, have read and understood the current BHAGIs and Standing Orders, and are fully aware of their duties.**

Nominated Representative	SRMO
Signed.....	Signed.....
Name.....	Name.....

VERBAL CONFIRMATION TO BE GIVEN TO THE STEWARDS NO LATER THAN 30 MINUTES BEFORE THE TIME OF THE FIRST RACE

SIGNED FORM TO BE SENT TO BHA AFTER RACING

medical@britishhorseracing.com

ANNEX H – RACE DAY AIDE-MEMOIRE FOR SRMO

Racecourse/ Point-to-Point Course:

_____

DATE: _____

On arrival

1. Report arrival to the nominated representative of the Managing Executive/ Point-to-Point Organising Committee

2. Check the 'RED Entry List' on the EMR or PPA Red Entry list and confirm with the Clerk of the Scales the Riders at the Meeting who require examination

3. Collect radio and confirm the RMO frequency

4. Arrange a time before racing to meet face to face with the Senior Vet, Head Groundsman, Clerk of the Course plus any other person likely to be involved in the management of a serious incident e.g. jockey entrapment, to clarify roles and responsibilities

5. Consider impact of weather conditions including visibility on medical response

6. Medically examine any Rider – at the request of the Clerk of the Scales.

60 minutes before racing – checks/inspections

7. Confirm arrival of all Medical Staff

8. Confirm the equipment and supplies in the following locations are BHAGI 11 compliant or delegate this role to another clinician

   - each RMO bag
   - the JMR/RMA/JTR
   - the ambulances

9. Ensure that each ambulance crew is given a copy of the current Standing Orders and BHAGI 11

10. Ensure that all other Medical Staff have previously been given a copy of the current Standing Orders and BHAGI 11

11. Conduct a full briefing (which must be concluded at least 45 minutes before the start of the first race).

Briefing (60 minutes before the start of the first race)

12. Ensure that all Medical Staff are in attendance

13. Ensure that the arrangements for each race are discussed, and that all Medical Staff are aware of the nature and location of their duties (this would normally involve the use of a large wall map of the course)

14. Ensure arrangements for concussion screening of all fallers are discussed and agreed

15. Highlight risk of spinal injuries in horse racing and their appropriate management by the team

16. Ensure that all Medical Staff are aware of the exact arrangements for by-passing and jockey entrapements on that race day

17. Ensure that RMOs are wearing appropriate PPE during racing

18. Ensure that communication arrangements are clearly understood and that all radios are working. RMOs are to be reminded that radio transmission is not a confidential network and therefore sensitive medical information should only be transmitted by telephone (landline or mobile).

Immediately after the briefing

19. Ensure that a RMO is available to examine any Riders requiring medical clearance

30 minutes before the time of the first race

20. Confirm with the nominated representative of the Managing Executive/ Point-to-Point Organising Committee that medical arrangements comply in full with BHAGI 11 and the Standing Orders.

During racing

21. Ensure that a RMO or Paramedic attends every Start and, before every race, reports to the Starter on arrival, to confirm that all medical arrangements are in place and that the race may proceed

22. Ensure that a RMO or ambulance personnel attends to every faller within one minute

23. Ensure that a RMO reports to the Clerk of the Scales between every race or at a Point-to-Point a RMO attends the weighing room at a place clearly marked after each race to examine all the fallen Riders and to be available should further services be required.

24. Ensure that a RMO is available to attend the Parade Ring and remain in (or immediately adjacent to) the Parade Ring until all Riders have left the area.

25. Ensure that all injuries and RED/AMBER Entries are entered onto EMR or paper record by the examining clinician under their login/signature. For Point-to-Point this must be entered on Medical Report Form A. Ensure concussion screening is performed and documented.

26. Liaise with the Clerk of the Course to ensure the Notification of Injury Protocol has been followed.

After racing

27. Ensure that all entries have been made on the EMR or BHA Medical Report Forms A & B for Point-to-Point Courses

28. If it is not possible to access the EMR enter all the information onto a MRB3 form(s) and send electronically to the BHA Medical Department immediately medical@britishhorseracing.com

    Note: It is the responsibility of the Senior RMO to ensure that the Managing Executive is aware of any MRB3 forms that need to be managed in this way

29. Ensure that all RED/AMBER Entries have been notified to the CMA. For Point-to-Point all pre-existing Amber Entries that have been cleared that day must also be notified to the CMA.

30. Ensure that the BHA/RCA Injury Notification Protocol has been followed

31. Confirm with the nominated representative of the Managing Executive/ Point-to-Point Organising Committee that all Medical Staff may be released

32. Stand down Medical Staff.

ANNEX I – Supporting Documents, Policies and Contact Numbers

Documents

The following documents and policies are held electronically on the EMR or will be sent out by the PPA at the beginning of the Season.

Discharge against Medical Advice

BOAST 4 Guidelines

Notification of Injury Protocol

On Course Physical Therapy Services Guidelines

Prohibited Substances

Concussion SOP

Concussion Helmet Bounty Scheme

Race Day Confirmation Form

Serious Incident Management Policy

Media Policy

Major Incident Planning

Racecourse Medical Inspections

Numbers

CMA	07788 567440	(Dr Kate Prior & Dr Steven Ready)
BHA	Tel 020 7152 0138	(Medical Dept.)
IJF	01638 662 246 07423 002650 07885 399432	(main switchboard) (on call liaison number) (Lisa Hancock CEO)
PJA	01635 778108 07970 149415	(main switchboard) (Dale Gibson)
RCA	01344 873536	
Weatherby	01933 227214	(Technical)

APPENDIX (10)B

CONCUSSION PROTOCOLS

RMOs have been sent the BHA Concussion Protocol under separate cover.

11. CONCLUSION OF THE MEETING

RETURN OF MARKED RACECARD AND OTHER DOCUMENTATION

11.1 Immediately following the Meeting a marked Racecard showing all the runners, weights carried, placed horses, (and the distances between them), riders, overweights and race times (see Appendix (11)A), must be sent to the PPA.

Written reports of all enquiries held and objections lodged must be submitted on the official form, together with any completed RQC declarations (Appendix (8)A and cheques (payable to the Point-to-Point Authority) for any fines imposed.

MEDICAL REPORT FORMS (A and B) AND RIDER INJURY NOTIFICATION

11.2 Medical Report Forms(A and B) MUST be returned to the BHA Medical Department WITHIN 24 hours of the Meeting under separate cover by the (S) RMO. They can also be emailed direct to the Medical Department medical@ britishhorseracing.com It is strongly recommended that a copy of the forms are kept in case they fail to arrive.

The SRMO must, within three hours of the Meeting ending, send out a text message to the BHA CMA (07788 567440) informing them of any red entries or confirming there were none.

APPENDICES

APPENDIX (11)A MARKED RACECARD

APPENDIX (11)A

MARKED RACECARD

To be returned to the PPA office immediately after the conclusion of the Meeting.

T: 6-11 4L, 6L

SIXTH RACE 1.55pm SP: 9-2 DECLARE BY 1.10pm

WEIGH OUT BY 1.40pm SAFETY FACTOR 18

TOTE-WIN £3.80 OF £9.80

Sponsored by
FRONTIER AGRICULTURE LTD.

THE OPEN MAIDEN RACE

For the Jim Runciman Challenge Cup
£150 to the winner, £100 to the second and £50 to the third
Mementoes to the winning Owner and Rider
2008 Winner: Miss H. Bevan's Thegalleryman (IRE) (J. Hamer)

1 **CARRIAGE RIDE (IRE)** 12-05
11 b.g. Tiderio (USA) - Casakurali (Gleason (USA))
Mr Martin Hilton - Belvoir — M. Hilton
Blue, white chevron and stars on sleeves, blue cap, white stars
66453-6 *Moderate maiden; 5ll 6th to Goscar Rock at Cottenham 6 Dec; used to front run; gd-hvy (f12 w0)* 53

2 **CRACK AT DAWN (IRE)** SHEENKIN CHEERS TONGUE TIE 12-05
8 b or Br.g. Insan (USA) - Ten Quid Short (IRE) (Colonel Godfrey (USA))
Mr Michael Gates - Warwicks — J. England
Emerald green and white diabolo, white cap
5p50-p2 *Ex-Irish maiden; 1l 2nd to Gunna Be A Devil at Kenton 29 Nov; lacks finishing pace; g-soft (r1 w0)* 76

3 **DOUBLE PAST** 12-05
7 b.g. Yaheeb (USA) - Gale Blazer (Strong Gale)
The Percy's Punters Partnership (Mr A. Wakeham) - Middleton (Bob Woodhouse) — M. Seston
Dark blue and white stripes, white cap, black star
-p66p-5 *Moderate ex-novice hurdle/chaser; n.d 48l 5th to Goscar Rock in Cottenham maiden 6 Dec (r1 w0)* 56

4 **FREE FROM MAGEE (IRE)** 12-05
9 ch.g. Denel (FR) - Arctic Gem (Rakaposhi King)
The Last Chance Group (Mr D. Frankland) - Grafton (Derek Frankland) TOM ELLIS
Black and emerald green (halved), emerald green sleeves, emerald green cap, black spots
-p2ppp- *Inconsistent maiden; 2l 2nd to Inchadoney Boy at Horseheath Feb'09; error-prone jumper (r13 w0)* 63

5 **LEE GAP FAIR (IRE)** 12-05
8 b.g. Bob Back (USA) - Trumpster's Gale (IRE) (Strong Gale)
Mr Ray Newby - Suffolk (Alex Embiricos) — J. Owen
Purple, orange cross belts, hooped sleeves, purple cap
606-f4/ *Half-bro to 3rd One; 17l 4th to Glenbower Woody at Godstone (2m4f) Mar'08; absent since (r2 w0)* 60

6 **MADE WELCOME** (7a) 11-12
8 ch.m. Most Welcome - Maid of Morven (Broadsword (USA))
Mr P. P. Hall - W. Norfolk — B. Rivett
Black, yellow sash, pink and black hooped sleeves
pp3/ *Half-sis to poor pointer Border Chief; 11l 3rd to Nakinover at Fakenham (membed) Apr'08 (r3 w0)* 60

7 **MOISYR ANSHAN (IRE)** 12-05
5 ch.g. Anshan - Aoife Landers (IRE) (Zaffaran (USA))
Mr H. Hill - Cambridge Univ — M. Smith
White, mauve hoop, sleeves and cap
4p4pp- *Ex-Irish pointer; modest 4th in maiden at Lingstown Mar'09; seems one paced; g-gfs (r0 w0)* 66

8 **MONKERTY TUNKERTY** 12-05
6 b.g. Silver Patriarch (IRE) - Orphan Annie (Gunner B)
Mr Neville Ender & Mr Peter Randall - Middleton (Bob Woodhouse) — M. Seston
White, royal blue spots and sleeves, white armlets, red cap
90-2 *Novice pointer; 2l 2nd to Leader Blue at Cot'hem (2m4f) 6 Dec; takes keen hold; should win (r1 w0)* 78

9 **MR JOHNSON (IRE)** 12-05
6 b or Br.g. Runyon (IRE) - Santosha (Wolver Hollow)
Mr Michael Gates - Warwicks — J. England
Emerald green and white diabolo, white cap
p2pp-p3 *Ex-Irish pointer; 22l 3rd to Leader Blue at Cottenham (2m4f) 6 Dec; acts on soft going (r2 w0)* 66

10 **PECANWOOD (IRE)** 12-05
7 ch.g. Bluebird (USA) - Baccara (IRE) (Sri Pekan (USA))
Lady Susan Watson - Middleton — M. Walford
Emerald green and royal blue check, emerald green sleeves and cap
p-ppuf/ *Third season pointer; half-bro to Something Simple; yet to finish; shown speed for 2m2f (r7 w0)* ....NR

11 **SHE'LL BE ALRIGHT** (7a) 11-12
5 ch.m. Zahran (IRE) - Sapphire Saul (Nicholas Bill)
Mr D. Smith (Saul) - Berkeley (Julie Houldey) — D. Mansell
Pink, black stars, black sleeves, pink armlets, pink cap, black stars
pp- *Second season mare; n.j.w & p.u after 2m4f in maidens at Upton & Woodford last April (r2 w0)* .....NR

12 **SUPREME HENRY** 12-05
6 b.g. Kayf Tara - Best of The Girls (IRE) (Supreme Leader)
Mrs Yvonne Goss - Farmers Bloodhounds — J. Goss
Purple, beige armlets, purple cap
pu33b-7 *Big gelding; moderate maiden; n.d 50l 7th to Leader Blue at Cottenham (2m4f) 6 Dec; g-firm (f8 w0)* ...57

13 **TUDOR BUCK (IRE)** 12-05
9 b.g. Luso - Tudor Doe (IRE) (Buckskin (FR))
Mr D. Line & Mrs L. Harvey - Pytchley (David Line) — T. Lane
White, maroon cross belts, halved sleeves, maroon and white quartered cap
*9-p0pp- *Ex-novice hurdler; shown little since good 3rd over 2m3f at Exeter Mar'08; gfs-hvy (r0 w0)* 51

14 **VICTOR BRAVO (IRE)** 12-05
6 b.g. Old Vic - Move Over Lucy (IRE) (Grand Plaisir (IRE))
Mr J. D. Callow - Albrighton Woodland (Helen Needham)
Hingley and Callow Oils Ltd
Red and grey (halved), red cap
rp-pp- *Third season pointer; yet to finish a race; in touch for 2m4f at Chaddesley on 3rd outing (r3 w0)* .....NR

15 **WITNESS THIS (IRE)** 12-05
5 b.g. Witness Box (USA) - Capital Gold (IRE) (Capitano)
Mr D. P. Constable - N. Ledbury (Zoe Hammond) — E. BURTON
ICS Ltd
Red, black chevrons, black sleeves, red stars, black cap
2p-p52- *Ex-Irish pointer; 1l 2nd to Two Powers in Inchydoney maiden May'09; acts on firmish (r0 w0)* 76

POINT-TO-POINT STEWARDS

GUIDE TO PROCEDURES AND PENALTIES

(To be read in conjunction with

BHA Regulations for Point-to-Point Steeple Chases)

GUIDE TO PROCEDURES AND PENALTIES

This Guide contains information on the Point-to-Point Regulations and the various procedures and charts which will be referred to at all times when deciding on the appropriate course of action either by the Stewards on course or before a Disciplinary Panel. The Guide should not be seen as either a replacement for, or an interpretation of, the Regulations. It does, however, seek to clarify and provide easy reference to a number of crucial areas which may arise during the course of a day's racing.

The guidelines as to penalties are not intended to override the discretion of the Stewards or the Disciplinary Panel under the Regulations. However, in the interest of consistency and fairness, Panels are expected to operate within the guidelines unless they have good reason to consider that there are exceptional circumstances in the case before them which justifies a greater or lesser penalty outside the guidelines. Panels that go outside the penalty guidelines should be prepared to explain their reasons for so doing.

If you have any questions, or need any further advice, on the information contained in this booklet you should speak to the PPA (Paul Miller) or the BHA (Lyn Williams)

1. STEWARDING AT A POINT-TO-POINT MEETING

DEPLOYMENT OF STEWARDS

1.1 The following principles should be adhered to whenever possible:

- The Chair of Stewards should arrive early to walk the course with the Clerk of the Course to confirm the state of the going.

Note: The Chair may already have been involved in earlier inspections of the course and discussions with the Organising Committee as to what further action is necessary. In all cases announcements, through social media and associated websites, should be made ahead of an inspection with a follow up announcement with the result. If the course is unfit for racing but the view is that it may be suitable by the day or the start of the Meeting; the announcement should make it clear that a further inspection is required to ascertain if racing can take place. No announcement should indicate racing is to take place unless all those present are satisfied that this is the case. Any decision over the fitness of a course and the possible postponement/abandonment of racing should be a collaboration between the Organising Committee, the Stewards and, if the decision is being made on the day, the Local Inspector. For the avoidance of doubt the final decision of racing continuing rests with:

1. The Organising Committee up to 2hrs before the first race; and
2. After this time with the Stewards.

- The Chair for the day is responsible for the deployment of the Stewards, who should also arrive in good time to acquaint themselves with the course and the Officials of the Meeting. It is recommended that the Chair organises a rota of duties so that the Stewards are not obliged to perform the same role from the same location for every race on the card. Organisers should produce a race by race rota template sheet for the Stewards to complete before racing
- There should always be at least one Steward in the Parade Ring prior to each race.
- A Steward should be present in the unsaddling enclosure and at the weigh in after each race.
- All Stewards should report to the Stewards' tent after each race.
- One Steward should attend the start for at least one race during the day.
- One Steward should concentrate particularly on the rear of the field to monitor possible infringements of Regulations 125-128 (failure to obtain the best possible place), and any failure to pull up exhausted horses.
- A Steward should be located 'head on' in the finishing straight for each race and if necessary other Stewards located at advantageous points so that the whole race can be seen. This could include `head on' turning out of the back straight or at any point on the course where interference may be anticipated. These 'field' Stewards should be equipped with radios so that an announcement to hold a Stewards Enquiry, if necessary, can be made as soon as possible.

STEWARDS' POWERS

1.2 Regulations 11 – 16 set out the powers that Stewards can employ to ensure that racing is conducted properly. They form the foundation for all decisions that Stewards are likely to take during race Meetings. The main points of these powers are:

- make or vary arrangements for the conduct of the Meeting or any race run at it (Regulation 13(i)); including dividing a race on the day if the Safety Factor is exceeded but excluding any variation whatsoever to the minimum medical provision on the day.
- abandon a day's racing or any races or to postpone any races (Regulation 13(ii));
- leave out or alter any fences in the circuit for safety reasons (Regulation 13(iii)); but as a guide no more than 50% should be omitted on the first circuit.
- prevent from running any horse which is not qualified (Regulation 13(iv));
- order the examination of any horse and withdraw such horse if any person prevents it from being examined (Regulation 13(vi));
- exclude or eject persons (Regulation 13(vii));
- enquire into and adjudicate upon the conduct of all persons on the racecourse (Regulation 13(viii));
- reduce, on raceday only and in exceptional circumstances, in consultation with the Clerk of the Course and the Local Inspector, the Safety Factor in each category of race (Regulation 13(x))

Note: Under NO circumstances can the Safety Factor be increased.

- prohibit a rider from using a particular whip (Regulation 13(xi));
- prohibit a horse (withdraw) from running on veterinary/welfare grounds after vet's opinion received (Regulation 13(xii));
- prohibit the use of any equipment which in the Stewards' opinion is unsuitable, unsafe or ineffective (Regulation 13(xiii));
- withdraw a horse where the Stewards consider that it will be unable to start without there being an unacceptable delay to the start of the race (Regulation 13(xiv));
- prohibit a horse from running where the Stewards have reason to be concerned by its unruly behaviour(Regulation 13(xv)) .
- impose fines up to a particular limit;
- report matters to the BHA;
- suspend riders until the end of the Meeting.

<u>Matters relating to betting disputes should not be entertained.</u>

WHEN TO HOLD AN ENQUIRY

1.3 An enquiry should be held if the Stewards have concerns over:

- a riding misdemeanours (e.g. whip, interference);
- an incident occurs which gives grounds for the possible altering of placings;
- a horse not running on its merits;
- discrepancies in running;
- a breach reported by Officials.

It is also sensible to hold an enquiry when:

- a possible breach of Regulations takes place;
- there is possible speculation over the running of a race;

CONDUCT OF A STEWARDS' ENQUIRY

1.4 **Enquiry procedure**

Following an objection made under Regulation 140(iv), or otherwise through Regulation 141(iii), the Chair of Stewards must be notified immediately that there is cause to convene a Stewards' enquiry.

Where placings may be affected or there is risk of a disqualification, an announcement must be made over the public address system that the Stewards are holding an enquiry, and the public are advised to retain all betting tickets until the result of the Stewards' enquiry is announced. Furthermore, the Steward present during weighing in must ensure that no announcement of "weighed in" is made over the public address system until authorised to do so by the Stewards.

The Chair must determine their panel of a total of 3 Stewards who will adjudicate in the enquiry. The following should be taken into consideration when drawing together the panel:

- Stewards with evidence central to the enquiry of the incident should not sit on the Stewards' panel. Instead they should be called upon as a witness.
- If the Steward has a pecuniary or other interest in the race, they should not act on the enquiry.
- It is not advisable that close family members act on the same enquiry.

Alongside the person(s) subject of the enquiry, the following people should be considered to attend the enquiry:

- the Stewards' Assistant (if you have one)
- the Clerk of the Course – if possible, and certainly for any course related enquiries, e.g. Taking the wrong course, interference etc…
- the VS should the offence be related to use of the whip, failing to pull up a tired/ exhausted horse etc…

- Witnesses – as and when necessary
- Owner/keeper should a novice rider be involved in the enquiry.

Where the person attending the enquiry is under the age of 18 they MUST be accompanied by the owner/keeper or another rider.

The Chair of the Stewards shall call in the person(s) subject of enquiry and at first instance introduce the acting Stewards and explain the presence of any other Steward who maybe in the room but not adjudicating. Any other person called upon as a witness or to consult, should also be introduced.

At the outset, the Chair shall then read out the grounds for the enquiry or objection, and for some enquiries under Regulation 141 (iii) inform the riders where the possible interference took place. Where applicable, the appropriate Regulation should be quoted.

- Each witness should be examined.
- An opportunity should then be given to the person against whom any allegations are made to comment further.
- The Stewards may raise such questions as they wish at any time and re-examine following statements from riders / witnesses.
- The person / people who are subject of an enquiry must be given the opportunity to call witnesses.
- At no point during this time should the Stewards make any comment on their own view of the incident.

Notes should be taken of all proceedings, and particularly important if it is evident that the enquiry relates to a potentially serious misdemeanour and/or is likely to result in an appeal to the BHA Disciplinary Panel.

Video evidence may be considered and used at the Stewards' discretion. Always bear in mind if choosing to view a recording that using only one camera angle may sometimes be misleading and Stewards should never be placed under pressure to watch a video replay. If the Stewards do view footage:

- **in advance of the hearing, they should ensure that it is made clear at the start of the enquiry as to what they have viewed and what can be seen. If it is possible, the person(s) subject to the enquiry should also be offered the opportunity to view the footage;**
- **after hearing the evidence, they should advise the person(s) when giving their decision that they have viewed the footage.**

<u>Consideration and decision – majority decision of Stewards prevails</u>

On completion of evidence, all other persons leave the room except the panel of 3 Stewards sitting on the enquiry and the Stewards' Assistant. Stewards should then consider their findings.

No further evidence may be heard without the accused being re-called.

The Stewards' Assistant should be invited to draw attention to relevant matters e.g. whether the accused had previously been cautioned or fined for the same or similar offence during the course of the current season.

Principle decision options:

- Impose recommended penalty up to laid down maximum.
- Suspension of rider for rest of Meeting (may be combined with

imposed penalty).

- Issue a caution or warning
- Formally NOTE explanation; producing Enquiry Report to confirm decision. In noting the explanation, should important further evidence be presented the enquiry may be re-opened.
- Record explanation and take no further action. Recording explanation on Stewards' return after Meeting
- Refer to the BHA

Persons involved would then be brought back and informed of decision. If accused appears aggrieved at decision, remind them of appeals procedure (see Regulations 146-149).

Post-enquiry

Stewards' enquiry report should be drafted and signed by the Stewards presiding at the enquiry (use templates to help).

Always ensure that the results of the Stewards' enquiry are announced, via the Clerk of the Scales, over the public address system so that the public are aware that the Stewards have enquired into a misdemeanour/horse performance. Therefore there is transparency and the public will be satisfied that action has been taken.

Note: Decisions affecting placings must be announced at earliest opportunity after time elapsed when objection could be made.

The Stewards' reports should then be sent to the PPA without delay by post/ fax/email and, in any event, original copies should always be sent in the post.

2. RUNNING AND RIDING (REGULATIONS 125 – 128 AND APPENDIX S)

In order to maintain the integrity of Point-to-Point racing it is vital that questions are asked by Stewards under Appendix S of the Regulations or that an enquiry under Regulation 125 is held when a horse does not appear to have been run on its merits. Stewards should not be deterred from holding an enquiry because they consider it unlikely that they will be able to prove a breach of Regulations 125, 126, 127 or 128. These enquiries are not `time sensitive' but Stewards should ensure the rider and Owner/Keeper (or their representative) are warned that they will be required to attend.

WHEN TO HOLD AN ENQUIRY

REGULATION 125 DOES NOT ALLOW EXCEPTIONS FOR HORSES WHICH DO NOT OBTAIN THE BEST POSSIBLE PLACING AND THEREFORE THE STEWARDS SHOULD ALWAYS INITIATE AN ENQUIRY ON THE DAY OR ASK QUESTIONS RATHER THAN LEAVING IT TO THE STEWARDS OFFICIATING AT A FOLLOWING MEETING WHEN THE HORSE RUNS.

IN HELPING TO DECIDE WHETHER OR NOT TO HOLD AN ENQUIRY THE PANEL SHOULD CONSIDER THE FOLLOWING QUESTIONS:

- **Was the horse asked for timely, real and substantial effort?**

If the answer to this question is NO an enquiry should be held. If YES

- **Was it ridden to obtain the best possible placing?**

If NO again an enquiry should be held.

HAVING DECIDED TO HOLD AN ENQUIRY

Questions relating to distance/ground/instructions etc. need to be asked of the rider and owner (or his representative) to establish the reasons for the way the horse was ridden. The points of concern relating to answering NO to the two questions should be put to the rider and owner.

Note: If the owner is unable to attend the enquiry, his representative must attend Stewards' Enquiries on his behalf. If the representative is not aware of the riding instructions given, the Stewards will progress the enquiry as to whether the owner has ensured that adequate instructions were given for the purposes of sub-Regulation 125 (ii) on the basis of the evidence of the rider as to what instructions were given to them.

HAS A BREACH OF THE REGULATIONS BEEN COMMITTED?

Prior to determining whether or not the rider and/or owner are in breach of Regulations 125 – 128 the Stewards will again consider the questions:

- **Was the horse asked for timely, real and substantial effort?**
- **Was it ridden to obtain the best possible placing?**

If the answer to either of those questions is NO, was the explanation given by either the rider or Owner/Keeper an acceptable reason for the horse not being asked for sufficient effort or ridden to obtain the best possible placing?

If the answer to either question remains NO, the rider is in breach of Regulation 126, 127 or 128.

With regard to the Owner/Keeper they will be in breach of sub-Regulation 125 (ii) if the Stewards are not satisfied that they either gave adequate instructions or gave instructions to the rider which if obeyed could or would prevent the horse from winning a race or obtaining the best possible placing. They will also be in breach if the rider is found in breach of Regulation 127 unless they are able to satisfy the Stewards that instructions had been given to the rider to enable the horse to obtain the best possible placing and the rider failed to comply with those instructions, and otherwise was in no way to blame for the horse's false running.

WHEN IN BREACH

If the Stewards find that a breach has been committed by the rider, it is necessary to categorise the offence as this will assist in arriving at the appropriate penalty. The following should be considered (Categorisation chart on page 138):

1. Was the rider in breach of Regulation 126 (negligence)? IF NOT
2. Was the rider in breach of Regulation 127 (intent to conceal)? IF NOT

it must be a breach of Regulation 128 (failure to take reasonable and permissible measures) by the rider.

Having decided which Regulation the rider is in breach of and the category of offence, the Stewards will need to decide the penalty for the rider and, if appropriate, the Owner/Keeper.

WHEN NOT IN BREACH

If the Stewards decide that no breach has been committed or are unable to conclude the enquiry the following options are available and must be referred to in the Stewards' report of the enquiry:

- Noting – all explanations i.e. EXPLANATIONS SHOULD NEVER BE ACCEPTED ON THE DAY
- Referral to the BHA for viewing (if available) or receiving reports on horse's previous runs
    - a marked improvement in performance (see below)
    - concerns are expressed about performance last time out.
- Adjourned enquiry
    - vital witness is not present.

IMPROVEMENT IN PERFORMANCE

If a winning horse shows much improved form (i.e. after a run where no enquiry was held, or following a 'noted' explanation) the Stewards should hold an enquiry and either further note the explanation or refer the matter formally to the BHA for further investigation.

3. INTERFERENCE (REGULATION 141 (III) AND OBJECTIONS UNDER 140 (IV))

HOLDING AN ENQUIRY

After holding an Interference enquiry and the riders have left the room, the Chair will ask the following questions of the Panel:

Was there interference?

If the answer is NO the enquiry should be closed. If YES

Who caused it?

If it cannot be established who caused it, the enquiry should be closed and the appropriate notice issued.

If the cause is established the Stewards must decide if a riding offence has been committed and whether the placings must be amended. To do this the Stewards should consider whether the offence was Dangerous, Careless, Improper or Accidental.

The Chair or Stewards Assistant should start at the top category and work down the left-hand side (the 'definitions') bearing in mind that a decision should be reached on the balance of probabilities and if the Panel is having difficulty reaching agreement he will move on to the next category.

Note: if the interference wasn't serious i.e. cannot be Dangerous and mandatory disqualification, the Stewards should go straight to the consideration of the placings before returning to Careless.

CATEGORIES AND DEFINITIONS

CATEGORY AND DEFINITION	EXAMPLES (These are the more common examples of interference but they are by no means exhaustive)
1. FOR DANGEROUS RIDING THE RIDER MUST CAUSE SERIOUS INTERFERENCE. SERIOUS INTERFERENCE IS WHEN INTERFERENCE CAUSES A HORSE AND/OR RIDER TO FALL OR VERY NEARLY FALL OR THE HORSE IS SEVERELY HAMPERED E.G. UP AGAINST THE RUNNING RAIL, OR IS PUSHED OR NEARLY PUSHED OFF THE COURSE.	
WAS IT DANGEROUS RIDING? A rider is guilty of Dangerous Riding if they cause serious interference by: (a) purposely interfering with another horse or rider or (b) riding in a way that is far below that of a competent and careful rider and where it would be obvious to such a competent and careful rider that riding in that way was likely to endanger the safety of a horse or rider.	**RIDER CAUSES SERIOUS INTERFERENCE BY:** (a) Riding across to prevent a horse from going 'up the inner'. (b) Attempting to force a horse off the track e.g. at the wing of a fence. (c) Deliberately barging his way between two horses. (d) Persistently attempting to get past any horse when there is insufficient room. (e) Failing for a sustained period of time to take corrective action. (f) Intentionally striking another horse or rider. (g) Manoeuvring/changing direction, suddenly or gradually (particularly on to the rail)

If the rider is guilty of Dangerous Riding the horse must be disqualified.

Advice to Stewards

There are two parts to Dangerous Riding. Firstly, there has to be serious interference but this is not enough on its own to warrant a breach of Dangerous Riding – serious interference can be caused by Careless or Improper Riding or can even be Accidental. The second part relates to the culpability of the rider in terms of his riding – see 1a) and b) and the examples a) to g) in the righthand column.

IF YOU ARE SATISFIED THAT THE INTERFERENCE IS NOT DANGEROUS YOU SHOULD PROCEED TO THE SECTION HEADED 'DETERMINING THE RESULT FOLLOWING INTERFERENCE' (ON NEXT PAGE) TO DETERMINE WHETHER THE PLACINGS NEED TO BE ALTERED. HAVING COME TO A DECISION ON PLACINGS, WHICH SHOULD BE IMMEDIATELY ANNOUNCED, YOU SHOULD REVERT BACK TO DECIDE ON THE CATEGORY OF INTERFERENCE.

2. FOR CARELESS RIDING THE RIDER USUALLY CAUSES INTERFERENCE BY FAILING TO TAKE CORRECTIVE ACTION OR BY MISJUDGEMENT.

WAS IT CARELESS RIDING?

A rider is guilty of **Careless Riding** if they fail to take reasonable steps to avoid causing interference or causes interference by inattention or misjudgement.

(a) Horse drifts into another without rider straightening it up, either by switching his whip, or, if that is insufficient, by using his reins.

(b) Horse hangs into the whip but the rider does not take sufficient action to straighten it up.

(c) Horse hangs in on bend without rider taking any action.

(d) Rider changes direction causing interference due to a misjudgement..

(e) Rider unintentionally strikes another horse or rider but should have moderated his use of the whip because of the close proximity of another horse or rider.

Demotion only occurs if the horse causing the interference has improved its placing as a result of that interference.

3. FOR IMPROPER RIDING THE RIDER USUALLY CAUSES INTERFERENCE BY CARRYING OUT A MANOEUVRE OR STRIKING ANOTHER HORSE OR RIDER.

WAS IT IMPROPER RIDING?

A rider is guilty of Improper Riding if they cause interference by some manoeuvre where they knew or ought reasonably to have known that interference would be the result, or any other form of misconduct (whether mounted or dismounted) in the course of riding.

(a) Rider manoeuvres or changes direction, where it was obvious that it would cause another rider to be moved off his intended line or to take evasive action.

(b) Rider pushes through, thereby creating a gap or widening an existing gap which never looked like being big enough.

(c) Rider moves across to the rails at the start causing interference.

(d) Rider intentionally rides across to cause interference.

(e) Rider intentionally strikes another horse or rider

(f) Rider intentionally attempts to interfere with or strike another horse or rider with his whip

Demotion only occurs if the horse causing the interference has improved its placing as a result of that interference.

4.	FOR ACCIDENTAL THE RIDER WILL HAVE BEEN TAKING REASONABLE STEPS TO PREVENT THE INTERFERENCE FROM OCCURRING OR THE INTERFERENCE WILL HAVE BEEN DUE TO CIRCUMSTANCES BEYOND THE RIDER'S CONTROL.
WAS IT ACCIDENTAL?	(a) Horse hangs without warning. (b) Horse continues to hang despite rider's best efforts to prevent it. (c) Horse runs down an obstacle without warning
The interference can probably be regarded as accidental but the following must still be asked:- Was the rider taking reasonable steps to prevent the interference from occurring? Was the interference due to circumstances beyond the rider's control? If the answer to both questions is NO, probably a riding offence has been committed and therefore go back to question 2. If the answer to either question is YES, the interference must be regarded as accidental.	
Demotion only occurs if the horse causing the interference has improved its placing as a result of that interference.	
Note: It should be remembered that being taken off one's intended line (intimidation) constitutes interference. It follows that there does not have to be physical contact for interference to occur.	

DETERMINING THE RESULT FOLLOWING INTERFERENCE

One of the most difficult and contentious decisions Stewards have to make is to determine the result following interference. If the Stewards consider that interference might have affected the result i.e. the interferer might have improved his placing as a result of the interference, an enquiry must be called and the 'weighed in' announcement stopped until the Stewards have come to their decision.

THE STEWARDS HAVE TO DECIDE WHETHER THE SUFFERER WOULD HAVE BEATEN THE INTERFERER BUT FOR THE INTERFERENCE.

There are a series of factors to take into account. The questions (below) and Guiding Principles (following) provide a framework within which the Stewards should work in order to come to their decision. They do not provide the answer but try to ensure that the Stewards address the correct questions when making a decision.

Stewards should ask themselves the following questions, being mindful of the relevant Guiding Principles:

1. Where did the incident take place in relation to the winning post?

2. How were the horses involved in the interference going at the time of the incident?

3. How serious was the interference i.e. how much momentum did the sufferer lose and/or how much ground was lost?

4. If the sufferer had had an uninterrupted run to the line, might it have finished in front of the interferer?

If NO – order placings to remain unaltered

If YES i.e. there is some doubt – proceed to question 5.

5. How easily did the interferer beat the sufferer?

Having considered those factors relevant to the incident in question, if the Stewards are satisfied that on the balance of probabilities the interference did improve the placing of the interferer in relation to the sufferer(s), the placings must be altered. Otherwise, the placings must remain unaltered. Generally speaking, the longer the Stewards discuss whether the placings should be altered, the less likely it is that they should be. If the Stewards are unable to conclude one way or the other, the result should stand.

GUIDING PRINCIPLES

(a) Dangerous Riding – the placing(s) must be altered as the interferer must be disqualified.

(b) Careless, Improper or Accidental – if the Stewards are satisfied that the interference improved the placing of the horse causing it, the placings must be altered.

(c) Where more than one horse is interfered with either in turn as a result of the same occurrence or simultaneously, each is a separate incident by the horse causing the original interference for which separate placing assessments are to be made.

(d) The benefit of doubt should go to the horse which finished in front.

(e) Stewards should have in mind that interference is likely to have impeded the sufferer to some degree and therefore a reversal of placings is more likely to follow where there is only a short head between the horses.

(f) The further away from the winning post that the incident occurs, the less likely it is that the result should be changed.

(g) Stewards must make allowance for the momentum and ground lost by the sufferer by imagining that it had an uninterrupted run to the line.

(h) Stewards must NOT make an allowance for any effect on the horse causing the interference.

(i) Stewards must take into account the ease with which the interferer beat the sufferer.

(j) If a horse is carried off its intended line, the effect will vary depending on the distance from the winning post.

INTERFERENCE OPTIONS

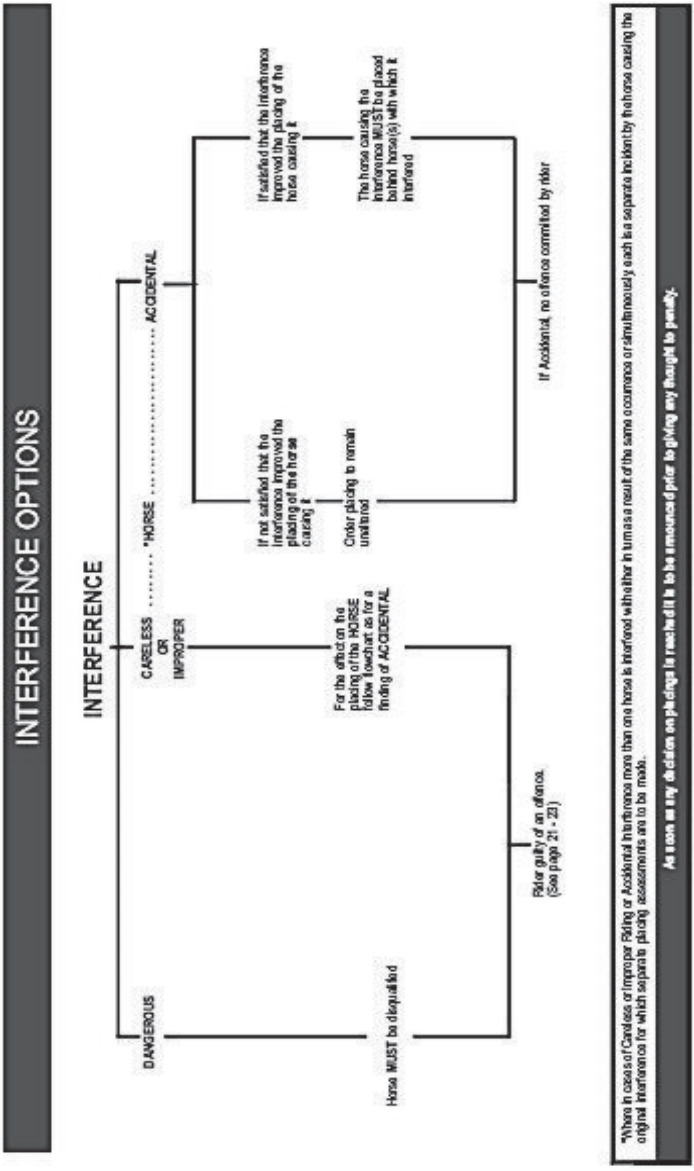

4. USE OF THE WHIP (REGULATION 123 AND APPENDIX O)

UNACCEPTABLE USES OF THE WHIP

The whip should be used for safety and encouragement only.

The Stewards shall hold an enquiry into any case where they are concerned that a Rider may have used their whip contrary to Appendix O of the Regulations.

The following are examples of uses of the whip, which may be regarded as a breach of Regulation 123:

(a) A rider must use an approved whip.

(b) A rider may use the whip (including when waving it) in the forehand or backhand position.

(c) On each occasion the whip is used when the rider's hand is off the reins, it will count towards the permitted number of strikes.

(d) A rider must not use their whip more than 7 times.

(e) A rider must not use their whip excessively down the shoulder in the backhand position, with their hands on the reins, for example, as an alternative to using the whip in the freehand.

(f) A rider must only use the whip on the hindquarters of the horse in either the forehand or backhand position or down the shoulder with the whip in the backhand position.

(g) A rider must allow 3 strides between each use of the whip.

(h) A rider must only use the whip where their horse is responding.

(i) A rider must not use the whip with excessive force, for example by pulling the whip through from the opposite side of the body or rotation of the core to generate increased leverage.

(j) A rider must not use the whip with their whip arm above shoulder height, for example where there is clear space between whip hand and top of the helmet.

(k) A rider must not use the whip when out of contention, for example when there is no realistic prospect of finishing in the first five places.

(l) A rider must not use the whip without regard to stride, for example by actual or perceived impression of a double strike.

(m) A rider must not use the whip if their mount is clearly winning (or clearly in any other placing).

(n) A rider must not use their whip when past the winning post.

(o) A rider must not weal a horse with their whip.

PROCEDURES

Horses may be subject to an inspection by a Veterinary Surgeon (VS) after the race. An Owner/Keeper (or their representative) must remove or adjust rugs or sheets for the purposes of any inspection.

The VS will report to the Stewards every horse which is wealed or injured.

An Owner/Keeper should attend any enquiry into a wealed or injured horse trained by them and may be liable to Disciplinary Action pursuant to Appendix O of the Regulations (which requires owners/keepers to give pre-race instructions to riders).

RESTRICTIONS

- The whip may be used with a maximum number of 7 hits permissible throughout the race.
- A hit is defined where a rider appears to hit the horse whilst their hand is not on the reins, regardless of how, where, or with what force the whip is used.
- Discretion for individual strike(s) will only be in exceptional circumstances where the whip has been used clearly and unequivocally for safety purposes. For example, where a horse continues to hang significantly despite the rider having visibly attempted to straighten their mount with the reins or in order to prevent a horse from running out.
- Where a rider may be in breach (you cannot be satisfied) of improper use of the whip a warning may be given and recorded on the end-of-day report.
- Riders must be acquainted with Appendix O of the Regulations for guidance on use of the whip in Point-to-Points.

PENALTIES

Penalties for a rider using their whip above the permitted level are as follows:

8 – 10 hits	£150 minimum
11 hits	refer* and stand rider down for rest of Meeting (see below)

*on referral the BHA will deal with the disqualification of the horse and penalise the rider for all breaches of the guidance identified by the Stewards

Whenever Stewards are satisfied that a rider has used their whip on 11+ occasions the matter has to be referred to the BHA. When Stewards give their decision it should be made clear to the rider why the matter is being referred (11+ hits) and the rider should be asked if they have anything further to add to what they previously said.

At the conclusion of the Meeting, the Stewards' Report outlining the decision to refer, together with statements, preferably from two witnesses who observed the rider's 11+ uses of the whip, should be emailed to the PPA.

Penalties for **other whip breaches:**

Hitting horse:

rapidly, without regard for stride	
i.e. twice or more in one stride:	£100 minimum (3 or more hits)
with whip arm above shoulder height:	£100 minimum (2 or more hits)
with excessive force:	£150 minimum (1 or more hits)
without giving horse time to respond:	£100 minimum (3 or more hits)
showing no response:	£100 minimum (3 or more hits)
out of contention:	£150 minimum (3 or more hits)
clearly winning:	£100 minimum (2 or more hits)
past the winning post:	£100 minimum (2 or more hits)
in the incorrect place:	£100 minimum
out of annoyance:	£150 minimum
wealed: minor weal	£150 minimum
moderate weal	£200 minimum

Where a rider is found in breach for a combination of whip offences, Stewards do not have to total up all the different amounts for the respective breaches but the fine must reflect all of the breaches. Stewards should start with the offence with the greatest penalty and add a further £50 for any other breach. For example: If in breach for both excessive frequency (10 times) and whilst out of contention, the rider may be fined £150 minimum for excessive frequency + £50 minimum for out of contention = £200 minimum fine.

Riders may also be suspended for the remainder of Meeting in conjunction with the fine.

SUBSEQUENT WHIP BREACHES

For 2nd offences (i.e. repeat whip offenders) – Stewards should calculate the appropriate fine for the offence(s) and double it.

For 3rd offences – refer to BHA.

OWNER'S/KEEPER'S LIABILITY

For all whip offences involving novice riders, Stewards should ask the Owner/Keeper to accompany the rider to the Stewards' enquiry. If they

are found to have given inadequate or no instructions to the rider with regard to use of the whip, or instructions, which if obeyed, could or would lead to violation of the whip restrictions, disciplinary action should also be taken against the Owner/Keeper.

HANDS AND HEELS RACES

A Rider using their whip in breach of the conditions for a Hands and Heels Race does NOT require referral to the BHA but should be dealt with by the Stewards on the course on the day.

The Stewards should hold an enquiry whenever concerned over a Rider's use of their whip. If, having heard the evidence, there is no acceptable explanation the Stewards should find the Rider in breach of Regulation 171 in respect of their '…failure to comply with the Hands and Heels Race conditions' and impose the following penalties:

- 1 to 3 uses £75 fine (minimum)
- 4+ uses £200 fine

HANDS AND HEELS RACE CONDITIONS

In Hands and Heels Races Riders must carry a whip but may only use their whip:

a. down the shoulder in the backhand position, with both hands on the reins, when approaching an obstacle; and

b. for clear and unequivocal safety purposes e.g. where a horse continues to hang significantly despite the Rider having visibly attempted to straighten their mount with the reins or to prevent a horse from running out.

If a Rider uses their whip as prohibited above, it will be regarded as failing to comply with an Instruction of the BHA and the Stewards of the Meeting (a breach of Regulation 171) and the entry point penalty is a minimum fine of £75. Any Rider who uses their whip four or more times will be fined a minimum of £200.*

If a Rider is fined for using their whip in one of these races they will be stripped of any points relating to that race but will be able to continue riding in the series. In the case of a second offence the entry point penalty is a fine of £200, and the Rider will be stripped of all points earned in earlier races and prevented from riding in the remainder of the series.

*Riders should also note that the BHA will also be reviewing video recordings of each race and will take retrospective disciplinary action wherever a breach of the Race Conditions is identified.

5. HAZARDS AT FENCES (REGULATION 122)

ADVICE AND GUIDANCE

The Stewards attention is drawn to the procedures for dealing with hazards at fences covered under Instruction 8.6, 'FENCE ATTENDANTS'.

Where during the course of a race the field is directed around a fence in an emergency, the Stewards must satisfy themselves that all horses completed the correct course (Regulation 122(iv)). Where any rider has jumped a fence at which the direction markers have been deployed the Stewards must hold an enquiry under Regulation 140(iv) to consider whether the rider(s) took all reasonable steps to avoid it. The rider(s) may be guilty of an offence and in any event the horse shall, on objection under Regulation 140(iv), be disqualified UNLESS THE STEWARDS ARE SATISFIED THAT THE PROVISIONS OF APPENDIX AA OF THE REGULATIONS APPLY.

6. COMMON OFFENCES AND PENALTIES

STEWARDS' POWERS

The maximum penalties which Stewards may impose are:-

1. A fine of £600 except where a maximum fine is laid down in the Regulations for the breach of any particular Regulations.

2. Suspension of a rider for the rest of the Meeting.

Where the Stewards consider it necessary or when they feel that their powers are insufficient to deal with a specific case they may refer it to the BHA.

Second and third offences only relate to the current Season. Stewards should always ask the "Offender" if they have been cautioned/fined for a similar offence during the Season. This can then be cross-checked at a later date by the PPA/BHA.

All fines must be collected at the Meeting and forwarded to the Fixture Secretary, who shall forward them to the PPA.

OWNERS/KEEPERS

Stewards should note that as from the commencement of the 2023/24 Season all Keepers have had to agree to be bound by the Regulations and are responsible for all possible breaches of the Regulations 'as if the Owner'. Accordingly, unless a Keeper can show that a breach of the Regulations was the sole responsibility of their Owner, and that they (the Keeper) were not a party to the breach in any way, the fine for any breach of the Regulations should be imposed upon the Keeper.

RECOMMENDED PENALTIES FOR COMMON OFFENCES

Offences	Regulations	Scale of Penalty
PRE-RACE		
Passport Unavailable	35 (ii)	Fine £100
Vaccinations. - not vaccinated at all - vaccinated on day of race - any of 6 days prior to the day of the race	38 (i)	No fine Order horse to be removed from course

Offences	Regulations	Scale of Penalty
Vaccinations - vaccinations section of passport not completed correctly or showing vacs not in order	38 (ii)	No fine Warn owner of future requirement
Use of Ice on course prior to running	Appendix BB	Withdraw Refer
Refer	57	Cannot ride at entire Meeting
Rider fails to take urine test	58	Refer
Failure of declared rider to come under Starter's Orders	114 (vi)	Fine £100 unless circumstances are acceptable to the Stewards
Horses not qualified to run under Reg 111(iv)	111 (iv)	Refer
Failure to run horse after declaration (unless walkover)	111 (v)	Fine £155 or refer
Late arrival of rider to weigh out	114 (i)	Fine £50 upwards
Late in Parade Ring (Horses)	120 (i)	Fine £50 upwards
Failure to lead horse fitted with bridle or a headcollar fitted with a chifney	115 (vii)	Fine £50
Unauthorised advertising	Appendix L	1st Offence – caution 2nd Offence – fine £75
Number Cloth incorrect or not carried	118	Fine £50
Skull Caps	115(ii), Appendix C	1st Offence – fine £50 2nd Offence – fine £100
Body Protectors	115(iv), Appendix C	1st Offence – fine £50 2nd Offence – fine £100
Whips not complying with specifications	117	1st Offence – fine £50 upwards 2nd Offence – fine £100
Reins not correctly attached to bridle	115 (v)	Fine £50 upwards

Offences	Regulations	Scale of Penalty
Saddling errors	115 (iii)	Fine £50 upwards
Oversize Calkins Oversize Nailheads	116	Fine £50
Failure to run horse in declared headgear or horse runs in a non-declared item	119 (ii) (a)(b)	Fine £75
Failure to run in declared tongue strap (reason not acceptable) Running in tongue strap when not declared	119(ii) (c)(d) 119(ii) (c)(d)	Fine £50 upwards Fine £50 upwards
Unruly behaviour of horse	26 (vi)	1st occasion – informal warning to owner 2nd occasion – owner to be informed: "Future similar behaviour will render the matter liable to be reported to the BHA" 3rd occasion – refer
Misconduct at start	26 (x), (xi)(e)	Fine £75

DURING RACE

Earplugs removed	119(iv)	Fine £50 If by rider on instruction of Owner/Keeper also fine Owner/Keeper £50
Riders continuing in race (including following remounting). Taking the wrong course. Jumping fence when direction markers are in place	122/126	Fine £75 upwards Mandatory disqualification unless provisions of Appendix AA of Regulations apply.
Rider disregards stop race flag	122 (vi)	Fine £250
Riding Offences (a) Interference – Careless, dangerous and improper	123	1st Offence – caution (ONLY Careless) – fine £75 upwards 2nd Offence – fine £150 upwards and suspend for remainder of Meeting 3rd offence – Refer If DANGEROUS, mandatory disqualification and recommend that fine doubled.
Riding Offences (b) Improper Use of the Whip	123, Appendix O	See 'Use Of The Whip' on Pages 130 and 131

Offences	Regulations	Scale of Penalty
Hands and Heels Conditions	171	1 - 3 uses £75 minimum 4+ £200
Failure to pull up/ dismount from exhausted/ lame horses	123, Appendix V	Fine £150 upwards
Rider remounting without a veterinary check of horse and/or medical check of rider.	Appendix V	Fine £75
Running and Riding (failure to achieve best possible placing)	125 to 128 Appendix S	See table at page 138
Use of unacceptable equipment	Appendix X	Before race: Remove After race: Fine £50 and warn against future use

POST-RACE

Failure to weigh in	130 (i) & (iv)	Winner – fine £150 – £600 or refer* *If wilful refer. Second or Third – fine £60 – £125 Fourth – fine £40 Mandatory disqualification of horse
Failure to draw correct Weight (more than 2lb light)	115 (iii), 131 (iii), (iv)	If explanation not acceptable Owner/keeper – fine £130 – £600. (Unless fault is riders in which case rider fined) Mandatory disqualification of horse
Weighing in at 4lb or more overweight	131	Fine £50 upwards (Do not disqualify)
Failure to report to the Doctor after a fall	55 (i)	Fine £70
Improper Conduct	170 (ii), (iii)	£90 – £600 or refer

RUNNING AND RIDING PENALTIES

FAILURE TO OBTAIN THE BEST POSSIBLE PLACING – CATEGORISATION OF OFFENCE		
POTENTIAL OFFENCE	SUBDIVISION OF POTENTIAL OFFENCE	APPROPRIATE ACTION (First offence during previous 12 months).
Regulation 126 (Negligence) Riders	(i) Failing to ride out approaching the finish by dropping hands on a horse that would have been placed first, second, third, fourth. (ii) Mistaking the race distance and either riding a finish a circuit too early or failing to ride a finish. (iii) Taking the wrong course. (iv) Ill-judged race – rider only starts to ask for an effort too late as a result of serious misjudgement or inattention.	(i) a) If would have won, £150 – £600 depending on seniority of rider or refer. If wilful, refer b) £75 – £150 if would have been second, third or fourth and depending on seniority of rider. (ii) £100 upwards (iii) £75 upwards. Mandatory disqualification unless turned back and riding the correct course. iv) £100 upwards
Regulation 127 (Intent) Rider and Owner/ Keeper	(i) Deliberately preventing a horse from winning. (ii) Purposely not riding out a horse that would otherwise have won. (iii) Horse which has intentionally not been asked for sufficient effort. (iv) Horse which appears capable of reaching a challenging position but which intentionally is never asked to do so. (v) Using the racecourse as a training ground i.e. Schooling and/or Conditioning. Horse usually first time out or returning after a lengthy absence.	(i) Refer (ii) Refer (iii) Rider and/or Owner/Keeper £250 – £600 (iv) Rider and/or Owner/Keeper £250 – £600 (v) Rider and/or Owner/Keeper First offence – £90. Second offence – £180 upwards. Third offence – refer
Regulation 128 (Failure to take reasonable and permissible measures) Riders	(i) Rider fails to take all reasonable and permissible measures throughout the race.	(i) Rider £125 – £600.

Note: Normally a comparable penalty should be imposed on rider and Owner/Keeper where

both are found in breach of the Regulations. In addition, whilst details of the fines which should be imposed on an owner who has been found "in breach" are mentioned in the above table, the owner must always be fined under sub-Regulation 125(ii). This would not apply where the owner was riding the horse concerned.

BREACHES OF THE REGULATIONS FOR WHICH HORSES MUST BE DISQUALIFIED BY THE STEWARDS OF THE MEETING.

1. Failure to weigh in (Regulation 130) – unless part (iv) of the Regulation applies
2. Taking the wrong course – **unless**
   - **turning back and riding correct course (Regulation 122 and 126)**
   - **all of the riders have taken the same course and no rider gained an unfair advantage (Appendix AA)**
3. Failure to draw correct weight (Regulation 131)
4. Dangerous Riding (Regulation 123)
5. Remounting to continue in the race (Regulation 122(v))

OBJECTIONS TO DECISION OF JUDGE

In the event of a formal objection as laid down in Regulation 141, the Chair should follow this procedure:

- Ask the objector the basis for their objection and advise them that they will need to lodge a deposit of £60
- Ask the Judge to review their decision
- Examine the video evidence relied upon by the Judge
- Confirm or amend the original decision following discussions with the Judge.
- If decision stands, decide whether or not there was any merits in the objection and, if not, advise the objector of the loss of their deposit
- Show evidence to the Objector.

Note: If the Judge was unwilling to change their decision but the Stewards still have concerns over the result, a report should be sent to the PPA immediately after the Meeting.

PENALTY GUIDE TO 'RIDER TESTING' BREACHES FOLLOWING REFERRAL TO BHA

ALCOHOL	ENTRY POINT	RANGE
1st Offence		
20-38 micrograms per 100 millilitres of breath or at or above 54 milligrams per 100 millilitres in urine ('Lower Level')	Caution (rider stood down by Stewards and referred on the day)	
39 & upwards micrograms per 100 millilitres of breath or above 108 milligrams per 100 millilitres of urine ('Upper Level')	30 days	16 – 45 days
2nd Offence (within 24 months)		
Lower Level – if 1st offence 'Lower' - if 1st offence 'Upper'	9 days 16 days	7–21 days 7–21 days
Upper Level – if 1st offence is 'Lower'- if 1st offence is 'Upper'	30 days 65 days	16 – 45 days 50 – 90 days
3rd Offence (within 36 months)		
Upper or lower level	58 days	45 – 120 days

(these figures take account of the error factor in the equipment used for determining alcohol levels)

BANNED SUBSTANCES	ENTRY POINT	RANGE
1st Offence*	1 month	14 days –3months
2nd Offence* (within 24 months)	4 months	2 months –9months
3rd Offence* (within 36 months)	1 year	9 months –2years

*the only exceptions being for

- cocaine when the rider will normally have his licence withdrawn at the top of the range
- diuretics when a financial penalty may be considered appropriate

REFUSAL OR FAILURE TO PROVIDE A SAMPLE	ENTRY POINT	RANGE
Urine 1st Offence	4 months	3 months –6months
2nd Offence (within 36 months)	1 year	9 months –2years
Breath 1st offence	58 days	45 – 90 days
2nd Offence	6 months	4 months – 18 months

Note: Alcohol findings stand alone when looking at previous and subsequent offences except when in combination with a refusal to provide a sample. Offences under the headings 'Banned Substances' and 'Refusal or Failure to Provide a Sample' will be combined when taking into account previous offences. An offence shall drop out of the reckoning after 36 months of it being imposed, except in the case of an alcohol reading within the 'Lower Level' when it shall be 24 months

APPENDICES

APPENDIX (St)A	COMMON STEWARDS' ENQUIRY ANNOUNCEMENTS AND NOTICES
APPENDIX (St)B	AIDE-MEMOIRE – RUNING AND RIDING
APPENDIX (St)C	AIDE-MEMOIRE – INTERFERENCE
APPENDIX (St)D	AIDE-MEMOIRE – USE OF THE WHIP

APPENDIX (St)A

COMMON STEWARDS' ENQUIRY ANNOUNCEMENTS AND NOTICES

1. Announcements of Enquiries relating to Regulation 123 (interference)

(a) Stewards Enquiry. The public are advised to retain all betting tickets until the result of the Stewards' enquiry is announced.

(b) The Stewards are holding an enquiry under Regulation 141(iii) into possible interference involving PICT (e.g. the winner) and SCOT (e.g. after the second last fence). The public are advised to retain all betting tickets until the result of the Stewards' enquiry is announced.

Following the a) and b) announcements, the Steward present during weighing in should ensure no announcements are made over the public address system denoting "weighed in", until the Announcer has been authorised to do so by the Stewards.

(c) Here is the result of the Stewards' enquiry

The placings remain unaltered following the enquiry into possible interference after (e.g. the second last fence). The Stewards found that PICT, ridden by X, had interfered with SCOT, ridden by Y, that the interference was accidental but had not improved PICT's placing.

Or

The revised placings are as follows:- First SCOT, second PICT, third BRITON and fourth CELT. The Stewards found that PICT ridden by X, had interfered with SCOT, ridden by Y after (e.g. the second last fence) and that it was caused by careless riding. They fined X £75.

2. Riding Offence Notice (Regulation 141(iii))

The Stewards held an enquiry under Regulation 141(iii) into possible interference on the run in. They found that the winner PICT, ridden by X, had interfered with SCOT ridden by Y, placed second. They considered that the interference was accidental, but had not improved the placings of PICT. They therefore ordered the placings to remain unaltered

3. Use of the Whip (Appendix O of the Regulations)

(a) The Stewards called before them X, the rider, and Z, the Owner/Keeper of PICT, the winner, and enquired into the rider's use of the whip from the second last fence. Having heard their evidence the Stewards found the rider in breach of Appendix O of the Regulations headed "Use of the Whip" in that they had used their whip (e.g. with unreasonable force and frequency). The Stewards fined the rider £150.

(b) The Stewards called before them X, the rider, and Z, the Owner/Keeper of PICT, the winner, and enquired into the rider's use of the whip from the second last fence. Having heard their evidence the Stewards found the rider in breach of Appendix O of the Regulations headed "Use of the Whip" in that they had used their whip more than four times above the permitted level. The Stewards referred the rider to the BHA.

4. Running and Riding on Merits/Improvement in form (Regulation 125-128)

(a) The Stewards held an enquiry under Regulation 127 into the performance of PICT, the 5/4 favourite ridden by X and trained by Z (as compared with its previous run at R on .....)

(b) The Stewards heard evidence from the Owner/Keeper and rider and noted their explanation that ...

The following are possible alternatives to Paragraph b:

(i) The Stewards heard evidence from the Owner/Keeper and rider and considered that PICT had not run on its merits as it had intentionally not been put in the race or asked for an effort at any stage. They found the rider in breach of Regulation 127 and fined them £250. They also found the Owner/Keeper in breach of Regulation 125(ii) and fined them £250.

(i) The Stewards heard evidence from the Owner/Keeper and the rider, and being unable to conclude the enquiry without reference to other evidence, which was not then available to them, referred the matter to the BHA for further investigation. (When potentially important information is unavailable).

Note: Under Appendix S of the Regulations when a Steward has approached the connections of a horse to ask if they are able to account for its running and following the reply being reported to the Stewards, but a full enquiry not held, the Stewards should still record the details on the official Stewards form and announce any findings.

APPENDIX (St)B

AIDE-MEMOIRE – RUNNING AND RIDING

Guidance on conducting enquiry – Section 2 of the Guide to Procedures and Penalties

INTRODUCTIONS

Good afternoon [rider ..... and if present [Owner/Keeper.....

The Stewards are enquiring under Regulations 125 to 128 into the running and riding of

[horse ..... in the [race .....

The Stewards acting on this enquiry are

on my left..... and on my right.....

My name is .....

Running and Riding Guidance: When to hold an enquiry; When in breach; When not in breach

DECISIONS

If the rider is in breach

[rider .....
Having considered the matter, we find you are in breach of:

Regulation 126	in that you:	Failed to ride out by dropping your hands for……..place;
		mistook the race distance;
		took the wrong course;
		rode an ill-judged race
Regulation 127	in that you:	failed to give your horse the opportunity to obtain the best possible placing, with the intention of concealing its true ability/affecting the result;
		used the racecourse as a schooling ground/for conditioning
Regulation 128	in that you:	failed to take all reasonable and permissible measures throughout the race to obtain the best possible finishing position.

As a penalty you will be fined £…….. (Running and Riding Penalties – page 138).

(If rider took wrong course and failed to turn back and ride the course correctly, horse must also be disqualified.)

You do have the right of appeal and if you wish to appeal this decision you should contact the BHA.

Can you please pay the money to [fixture secretary/other name] ..... before leaving. (Cheques should be made out to the "Point to Point Authority")

Thank you

If the Owner/Keeper is also in breach

[Owner/Keeper] .....Having considered the matter, we find you are in breach of:

Regulation 125	in that you	failed (to give adequate/correct instructions to your rider to ensure that your horse has run on its merits.

You will be fined £..... **(Note at bottom of Running and Riding Penalties)**

You do have the right of appeal and if you wish to appeal this decision you should contact the BHA.

Can you please pay the money to [fixture secretary/other name]…… before leaving. (Cheques should be made out to the "Point to Point Authority")

Thank you

If rider/Owner/Keeper not in breach,

[rider ..... and if present [Owner/Keeper.....

Having considered your riding and comments, we have noted your explanation(s).

Thank you.

APPENDIX (St)C

AIDE-MEMOIRE – INTERFERENCE

Prior to holding the enquiry if the placings are liable to alteration an announcement must be made that the Stewards are holding an enquiry under Regulation 141(iii). This holds up the "weighed-in" signal

---

Guidance on conducting enquiry – Section 3 of the Guide to Procedures and Penalties

---

INTRODUCTIONS

Good afternoon riders. The Stewards are enquiring into possible interference at/

about the .....

The Stewards acting on this enquiry are

on my left..... and on my right.....

My name is .....

Interference Guidance: Possible Riding Offence
Determining the Result

DECISIONS

ACCIDENTAL (NO riding offence)

[rider(s)] ..... having considered the incident, we find the interference to have been accidental.

In respect of the placings

(a) As you DID NOT improve your placing as a result of the interference the PLACINGS REMAIN UNALTERED.

(b) As you DID improve your placing as a result of the interference the PLACINGS HAVE BEEN REVISED as follows:

First..... second ..... third..... fourth.....

and your horse placed..... /disqualified

Thank you

If there HAS BEEN a riding offence

[rider(s)] ..... having considered the incident, we find that you are in breach of Regulation 123. You are guilty of:

(a) DANGEROUS RIDING

(b) CARELESS RIDING

(c) IMPROPER RIDING

In that, at/about the .....you caused interference to .....

Placings

(a) As you DID NOT improve your placing as a result of the interference the PLACINGS REMAIN UNALTERED.

(b) As you DID improve your placing as a result of the interference the PLACINGS HAVE BEEN REVISED as follows:

First..... second ..... third ..... fourth .....

and your horse placed..... /disqualified.

Penalty (Common Offences and Penalties – page 136)
Ask if this is the rider's first interference offence in Point to Points this Season

---

As a penalty you will be:

Fined £ .....

Notes: i) Fine should be doubled if guilty of Dangerous riding

ii) Suspension of rider for remainder of Meeting can be applied in addition to a fine if appropriate

You do have the right of appeal and if you wish to appeal this decision you should contact the BHA.

Can you please pay the money to [fixture secretary/other name]…… before leaving. (Cheques should be made out to the "Point to Point Authority")

Thank you

APPENDIX (St)D

AIDE-MEMOIRE – USE OF THE WHIP

Guidance on conducting enquiry – Section 4 of the Guide to Procedures and Penalties

---

INTRODUCTIONS

Good afternoon [rider ..... The Stewards are enquiring into your

use of the whip during the .....race.

The Stewards acting on this enquiry are

on my left..... and on my right .....

My name is .....

Owner/keeper and Vet to be present if necessary

Whip Guidance: Breaches; Procedures; Penalties – Section 4

DECISIONS

<u>If the rider is in breach – FINE ON DAY</u>

Ask if this is the rider's first whip offence in Point-to-Points this Season

[rider ..... having considered your use of the whip,

we find you in breach of Appendix O in that [where/when/from.....

you used your whip:

ABOVE THE PERMITTED LEVEL

WITH EXCESSIVE FORCE

WHEN OUT OF CONTENTION

WITHOUT GIVING THE HORSE TIME TO RESPOND

IN THE WRONG PLACE etc.

As a penalty, you will be fined £ .....

You do have the right of appeal and if you wish to appeal this decision you should contact the BHA.

Can you please pay the money to [fixture secretary/other name]…… before leaving. (Cheques should be made out to the “Point to Point Authority”)

Thank you

<u>If the rider is in breach – REFERRAL</u>

[rider ..... having considered your use of the whip,

we find you in breach of Appendix O in that [where/when/from.....

you used your whip on eleven or more occasions. Accordingly, we will be referring your breach to the BHA for them to consider the appropriate penalty and the possible disqualification of your horse. Is there anything further you wish to say?

Thank you. Your comments will be passed on to the BHA

© The British Horseracing Authority, **2026**

All rights reserved. No part of this material may be reproduced or transmitted in any form or by any means, including photocopying, recording or republication without the written permission of the British Horseracing Authority.